LAURENTIAN PLAY SYSTEM – F23280

INSTALLATION AND OPERATING INSTRUCTIONS

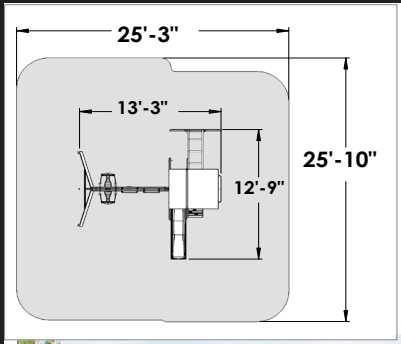

WARNING To reduce the risk of serious injury or death, you must read and follow these instructions. Keep and refer to these instructions often and give them to any future owner of this play system. Manufacturer contact information provided below.

OBSTACLE FREE SAFETY ZONE - **25'3" x 25'10"** area requires Protective Surfacing. See page 3.

MAXIMUM VERTICAL FALL HEIGHT - **6'5"**

CAPACITY - **10** Users Maximum, Ages **3** to **10**; Weight Limit **110 lbs. (49.9 kg)** per child.

RESIDENTIAL HOME USE ONLY. Not intended for public areas such as schools, churches, nurseries, day cares or parks.

Cedar Summit
PREMIUM PLAY SETS™

Cedar Summit
c/o ©Solowave Design L.P.
Mount Forest, ON Canada
N0G 2L0

www.cedarsummitplay.com
support@cedarsummitplay.com
Customer Service
1-877-817-5682 (toll free)
1-519-323-2258

Table of Contents

Warnings and Safe Play Instructions. . . . . pg. 2
Protective Surfacing Guidelines. . . . . pg. 3
Instructions for Proper Maintenance . . . . . pg. 4
About Our Wood – Limited Warranty . . . . . pg. 5
Keys to Assembly Success . . . . . pg. 6
Metric Conversion Sheets . . . . . pg. 7,8
Part ID. . . . . pg. 9
Installation of I.D./Warning Plaque . . . . . .Final Step

3403280

Rev 10/27/2014

Warnings and Safe Play Instructions

CONTINUOUS ADULT SUPERVISION REQUIRED. Most serious injuries and deaths on playground equipment have occurred while children were unsupervised! Our products are designed to meet mandatory and voluntary safety standards. Complying with all warnings and recommendations in these instructions will reduce the risk of serious or fatal injury to children using this play system. Go over the warnings and safe play instructions regularly with your children and make certain that they understand and follow them. Remember on-site adult supervision is required for children of all ages.

WARNING

SERIOUS HEAD INJURY HAZARD
Installation over concrete, asphalt, dirt, grass, carpet and other hard surface creates a risk of serious injury or death from falls to the ground. Install and maintain shock absorbing material under and around play-set as recommended on page 3 of these instructions.

COLLISION HAZARD
Place play-set on level ground at least 6 feet from any obstruction such as a garage or house, fences, poles, trees, sidewalks, walls, landscape timbers, rocks, pavement, planters, garden borders, overhanging branches, laundry lines, and electrical wires. (See OBSTACLE FREE SAFETY ZONE on cover)

CHOKING HAZARD/SHARP EDGES & POINTS
Adult assembly required. This product contains small parts and parts with sharp edges and points. Keep parts away from children until fully assembled.

WARNING LABEL
Owners shall be responsible for maintaining the legibility of the warning labels.

STRANGULATION HAZARD
- NEVER allow children to play with ropes, clotheslines, pet leashes, cables, chains or cord-like items when using this play-set or to attach these items to play-set.
- NEVER allow children to wear loose fitting clothing, ponchos, hoods, scarves, capes, necklaces, items with draw-strings, cords or ties when using this play-set.
- NEVER allow children to wear bike or sport helmets when using this play-set.

Failure to prohibit these items, even helmets with chin straps, increases the risk of serious injury and death to children from entanglement and strangulation.

TIP OVER HAZARD
Choose a level location for the equipment. This can reduce the likelihood of the play set tipping over and loose-fill surfacing materials washing away during heavy rains.

DO NOT allow children to play on the play-set until the assembly is complete and the unit is properly anchored.

WARNING – Safe Play Instructions

- ✓ Observe capacity limitations of your play-set. See front cover.
- ✓ Dress children with well fitting and full foot enclosing footwear.
- ✓ Teach children to sit with their full weight in the center of the swing seat to prevent erratic swing motion or falling off.
- ✓ Check for splintered, broken or cracked wood; missing, loose, or sharp edged hardware. Replace, tighten and or sand smooth as required prior to playing.
- ✓ Verify that suspended climbing ropes, rope ladders, chain or cable are secured at both ends and cannot be looped back on itself as to create an entanglement hazard.
- ✓ On sunny and or hot days, check the slide and other plastic rides to assure that they are not very hot as to cause burns. Cool hot slide and rides with water and wipe dry prior to using.
- ✘ Do not allow children to wear open toe or heel footwear like sandals, flip–flops or clogs.
- ✘ Do not allow children to walk, in front, between, behind or close to moving rides.
- ✘ Do not let children twist swing chains or ropes or loop them over the top support bar. This may reduce the strength of the chain or rope and cause premature failure.
- ✘ Do not let children get off rides while they are in motion.
- ✘ Do not permit climbing on equipment when it is wet.
- ✘ Do not permit rough play or use of equipment in a manner for which it was not intended. Standing on or jumping from the roof, elevated platforms, swings, climbers, ladders or slide can be dangerous.
- ✘ Do not allow children to swing empty rides or seats.
- ✘ Do not allow children to go down slide head first or run up slide.

support@cedarsummitplay.com

⚠ Protective Surfacing - Reducing Risk of Serious Head Injury From Falls

One of the most important things you can do to reduce the likelihood of serious head injuries is to install shock-absorbing protective surfacing under and around your play equipment. The protective surfacing should be applied to a depth that is suitable for the equipment height in accordance with ASTM F1292. There are different types of surfacing to choose from; whichever product you select, follow these guidelines:

Loose-Fill Materials

- Maintain a minimum depth of 9 inches of loose-fill materials such as wood mulch/chips, engineered wood fiber (EWF), or shredded/recycled rubber mulch for equipment up to 8 feet high; and 9 inches of sand or pea gravel for equipment up to 5 feet high. NOTE: An initial fill level of 12 inches will compress to about a 9-inch depth of surfacing over time. The surfacing will also compact, displace, and settle, and should be periodically raked and refilled to maintain at least a 9-inch depth.
- Use a minimum of 6 inches of protective surfacing for play equipment less than 4 feet in height. If maintained properly, this should be adequate. (At depths less than 6 inches, the protective material is too easily displaced or compacted.)

NOTE: Do not install home playground equipment over concrete, asphalt, or any other hard surface. A fall onto a hard surface can result in serious injury to the equipment user. Grass and dirt are not considered protective surfacing because wear and environmental factors can reduce their shock absorbing effectiveness. Carpeting and thin mats are not adequate protective surfacing. Ground level equipment -- such as a sandbox, activity wall, playhouse or other equipment that has no elevated play surface -- does not need any protective surfacing.

- Use containment, such as digging out around the perimeter and/or lining the perimeter with landscape edging. Don't forget to account for water drainage.
- Periodically rake, check and maintain the depth of the loose-fill surfacing material. Marking the correct depth on the play equipment support posts will help you to see when the material has settled and needs to be raked and or replenished. Be sure to rake and evenly redistribute the surfacing in heavily used areas.
- Do not install loose fill surfacing over hard surfaces such as concrete or asphalt.

Poured-In-Place Surfaces or Pre-Manufactured Rubber Tiles

You may be interested in using surfacing other than loose-fill materials - like rubber tiles or poured-in-place surfaces.

- Installations of these surfaces generally require a professional and are not "do-it yourself" projects.
- Review surface specifications before purchasing this type of surfacing. Ask the installer/manufacturer for a report showing that the product has been tested to the following safety standard: ASTM F1292 *Standard Specification for Impact Attenuation of Surfacing Materials within the Use Zone of Playground Equipment*. This report should show the specific height for which the surface is intended to protect against serious head injury. This height should be equal to or greater than the fall height - vertical distance between a designated play surface (*elevated surface for standing, sitting, or climbing*) and the protective surfacing below - of your play equipment.
- Check the protective surfacing frequently for wear.

Placement

Proper placement and maintenance of protective surfacing is essential. Refer to diagram on front cover. Be sure to;

- Extend surfacing at least 6 feet from the equipment in all directions.
- For to-fro swings, extend protective surfacing in front of and behind the swing to a distance equal to twice the height of the top bar from which the swing is suspended.
- For tire swings, extend surfacing in a circle whose radius is equal to the height of the suspending chain or rope, plus 6 feet in all directions.

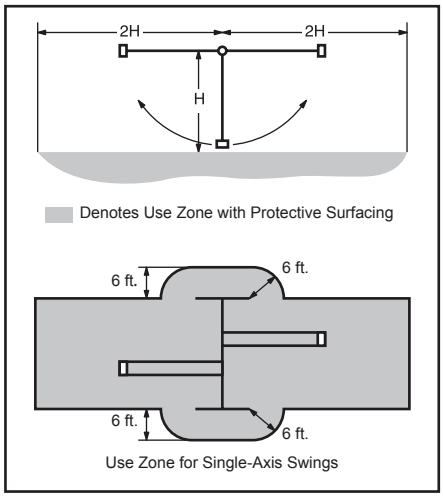

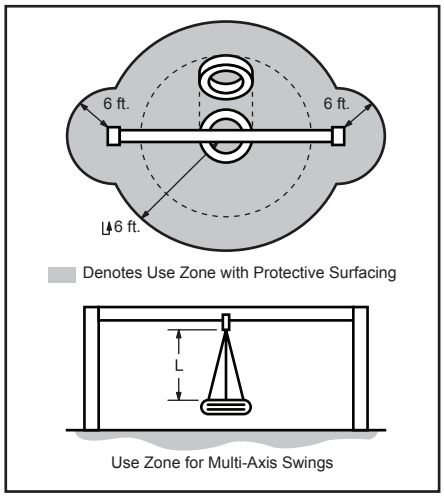

From the CPSC Outdoor Home Playground Safety Handbook. At http://www.playgroundregs.com/resources/CPSC%20324.pdf

support@cedarsummitplay.com

Instructions for Proper Maintenance

Your Cedar Summit Play System is designed and constructed of quality materials with your child's safety in mind. As with all outdoor products used by children, it will weather and wear. To maximize the enjoyment, safety and life of your Play Set, it is important that you, the owner, properly maintain it.

Check the following at the beginning of the play season:

HARDWARE:

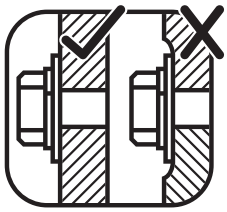

- ✓ Check metal parts for rust. If found, sand and repaint using a non-lead paint complying with 16 CFR 1303.
- ✓ Inspect and tighten all hardware. On wood assemblies DO NOT OVER-TIGHTEN as to cause crushing and splintering of wood.
- ✓ Check for sharp edges or protruding screw threads, add washers if required.

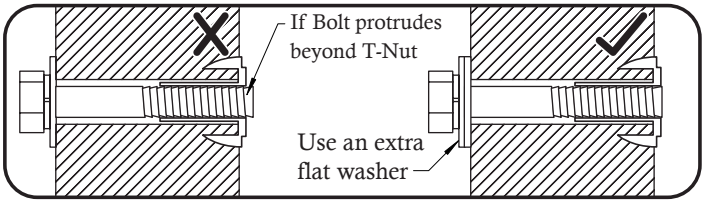

SHOCK ABSORBING SURFACING:

- ✓ Check for foreign objects. Rake and check depth of loose fill protective surfacing materials to prevent compaction and maintain appropriate depth. Replace as necessary. (See Protective Surfacing, page 3)

GROUND STAKES (ANCHORS):

- ✓ Check for looseness, damage or deterioration. Should firmly anchor unit to ground during use. Re-secure and or replace, if necessary.

SWING HANGERS:

- ✓ Check that bolts are secure and tight. Quick clips should be completely closed and threaded clips screwed tight.
- ✓ If squeaking occurs lubricate bushings with oil or WD-40®.

SWINGS, ROPES AND RIDES:

- ✓ Reinstall if removed during cold season. Check all moving parts including swing seats, ropes, chains and attachments for wear, rust and other deterioration. Replace as needed.
- ✓ Check that ropes are tight, secure at both ends and cannot loop back as to create an entrapment.

WOOD PARTS:

- ✓ Check all wood members for deterioration, structural damage and splintering. Sand down splinters and replace deteriorated wood members. As with all wood, some checking and small cracks in grain is normal.
- ✓ Applying a water repellent or stain (water-based) on a yearly basis is important maintenance to maintain maximum life and performance of the product.

Check twice a month during play season:

HARDWARE:

- ✓ Inspect for tightness. Must be firmly against, but not crushing the wood. DO NOT OVER-TIGHTEN. This will cause splintering of wood.
- ✓ Check for sharp edges or protruding screw threads. Add washers if required.

SHOCK ABSORBING SURFACING:

- ✓ Rake and check depth of loose fill protective surfacing materials to prevent compaction and maintain appropriate depth. Replace as necessary. (See Protective Surfacing, page 3)

Check once a month during play season:

SWING HANGERS:

- ✓ Check that they are secure and orientated correctly. Hook should rotate freely and perpendicular to support beam.
- ✓ If squeaking occurs lubricate bushings with oil or WD-40®.

SWINGS AND RIDES:

- ✓ Check swing seats, all ropes, chains and attachments for fraying, wear, excessive corrosion or damage. Replace if structurally damaged or deteriorated.

Check at the end of the play season:

SWINGS AND RIDES:

- ✓ To prolong their life, remove swings and store inside when outside temperature is below 32°F/0°C. Below freezing, plastic parts may become more brittle.

SHOCK ABSORBING SURFACING:

- ✓ Rake and check depth of loose fill protective surfacing materials to prevent compaction and maintain appropriate depth. Replace as necessary. (See Protective Surfacing, page 3)

If you dispose of your play set: Please disassemble and dispose of your unit so that it does not create any unreasonable hazards at the time it is discarded. Be sure to follow your local waste ordinances.

support@cedarsummitplay.com

About Our Wood

Cedar Summit Premium Play Systems uses only premium playset lumber, ensuring the safest product for your children's use. Although we take great care in selecting the best quality lumber available, wood is still a product of nature and susceptible to weathering which can change the appearance of your set.

What causes weathering? Does it affect the strength of my Play System?
One of the main reasons for weathering is the effects of water (moisture); the moisture content of the wood at the surface is different than the interior of the wood. As the climate changes, moisture moves in or out of the wood, causing tension which can result in checking and or warping. You can expect the following due to weathering. These changes will not affect the strength of the product:

1. **Checking** is surface cracks in the wood along the grain. A post (4" x 4") will experience more checking than a board (1" x 4") because the surface and interior moisture content will vary more widely than in thinner wood.
2. **Warping** results from any distortion (twisting, cupping) from the original plane of the board and often happens from rapid wetting and drying of the wood.
3. **Fading** happens as a natural change in the wood color as it is exposed to sun-light and will turn a grey over time.

How can I reduce the amount of weathering to my Play System?
At the factory we have coated the wood with a water repellent or stain. This coating decreases the amount of water absorption during rain or snow thus decreasing the tension in the wood. Sunlight will break down the coating, applying a water repellant or stain on a yearly basis is important maintenance. (see your local stain and paint supplier for a recommended product)

Most weathering is just the normal result of nature and will not affect safe play and enjoyment for your child. However if you are concerned that a part has experienced a severe weathering problem please call our consumer relations department for further assistance.

Complete and mail registration card to receive important product notifications and assure prompt warranty service.

5 Year Limited Warranty

Solowave Design warrants that this product is free from defect in materials and workmanship for a period of one year from the original date of purchase. In addition, lumber is warranted for 5 years against structural failure due to rot and insect damage. All other parts, such as hardware, swings, rides, accessories, and slides carry a one-year warranty only.
This warranty applies to the original owner and registrant and is non-transferable.
Regular maintenance is required to assure the integrity of your Play System. Failure by the owner to maintain the product according to the maintenance requirements may void this warranty. This warranty does not cover any inspection cost.

This Limited Warranty does not cover:
- Labor for replacement of any defective item(s);
- Incidental or consequential damages;
- Cosmetic defects which do not affect performance or integrity;
- Vandalism; improper use or installation; acts of nature;
- Minor twisting, warping, checking, or any other natural occurring properties of wood that do not affect performance or integrity.

Solowave Design products have been designed for safety and quality. Any modifications made to the original product could damage the structural integrity of the unit leading to failure and possible injury. Solowave Design Inc. cannot assume any responsibility for modified products. Furthermore, modification voids any and all warranties.

This product is warranted for **RESIDENTIAL USE ONLY**. Under no circumstance should a Solowave Design Play System be used in public settings such as schools, churches, playgrounds, parks, day cares and the like. Such use may lead to product failure and potential injury. Any and all public use will void this warranty.
Solowave Design disclaims all other representations and warranties of any kind, express or implied.

This Warranty gives you specific legal rights. You may have other rights as well which vary from state to state or province to province. This warranty excludes all consequential damages, however, some states do not allow the limitation or exclusion of consequential damages, and therefore this limitation may not apply to you.

Keys to Assembly Success

Tools Required

• Tape Measure • Carpenters Level • Carpenters Square • Claw Hammer • Standard or Cordless Drill	• #1 Phillips, #2 Robertson and Screwdriver • Ratchet with extension (1/2” & 9/16” sockets)	• Open End Wrench (1/2” & 9/16”) • Adjustable Wrench • 1/8” & 3/16” Drill Bits	• 3/16” Hex Key • 8’ Step Ladder • Safety Glasses • Adult Helpers • Pencil

Part Identification Key
On each page, you will find the parts and quantities required to complete the assembly step illustrated on that page. Here is a sample.

2X 012 Post 2 x 4 x 83”

Quantity — Key Number — Part Description, Part Size

Key Number: The first two digits represent the step number. The third digit represents the piece. Note that if the part is used in multiple steps then the number only reflects the first step it is used in.

Symbols

Throughout these instructions symbols are provided as important reminders for proper and safe assembly.

This identifies information that requires special attention. Improper assembly could lead to an unsafe or dangerous condition.

Use Help — Use Help

Where this is shown, 2 or 3 people are required to safely complete the step. To avoid injury or damage to the assembly make sure to get help!

Measure Distance

Check that assembly is square before tightening bolts.

Use a measuring tape to assure proper location.

Square Assembly

Check that set or assembly is properly level before proceeding.

Use Level

Pre-drill 1/8” & 3/16” Bit

Pre-drill a pilot hole before fastening screw or lag to prevent splitting of wood.

Tighten Bolts

This indicates time to tighten bolts, but not too tight! Do not crush the wood. This may create splinters and cause structural damage.

CAUTION – Protrusion Hazard

Once the assembly is tightened, watch for exposed threads. If a thread protrudes from the T-Nut, remove the bolt and add washers to eliminate this condition. Extra washers have been provided for this purpose.

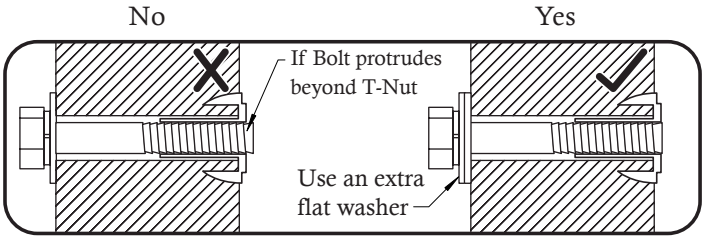

Proper Hardware Assembly
Lag screws require drilling pilot holes to avoid splitting wood. Only a flat washer is required. For ease of installation liquid soap can be used on all lag-type screws.

For bolts, tap T-Nut into hole with hammer. Insert the hex bolt through lock washer first then flat washer then hole. Because the assemblies need to be squared do not completely tighten until instructed. Pay close attention to diameter of the bolts. 5/16” is slightly larger than 1/4”.

Note: Wafer head bolts with blue lock tight or a bolt with a Ny-Lok nut do NOT require a lock washer.

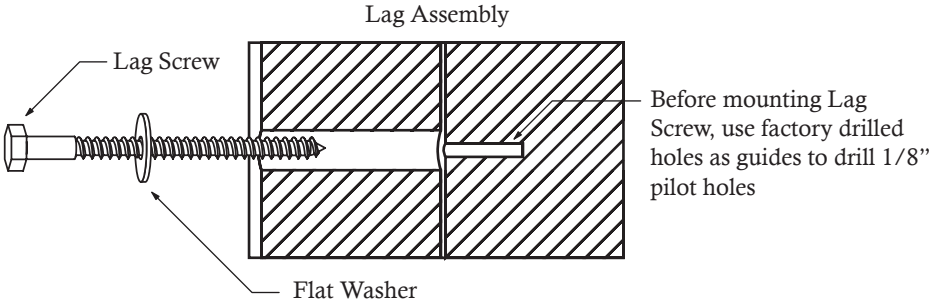

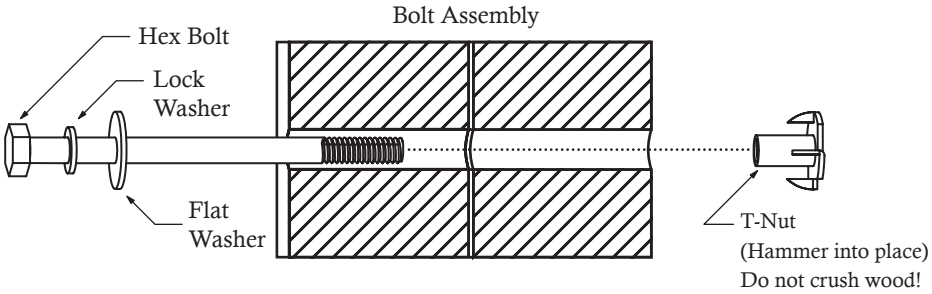

support@cedarsummitplay.com

SOLO)WAVE DESIGN HARDWARE

5/16"(.31) = 8mm Hex Bolt

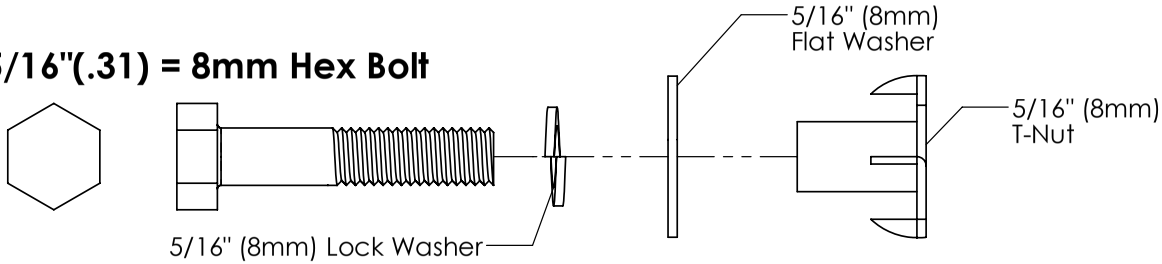

1/4"(0.25) = 6mm Hex Bolt

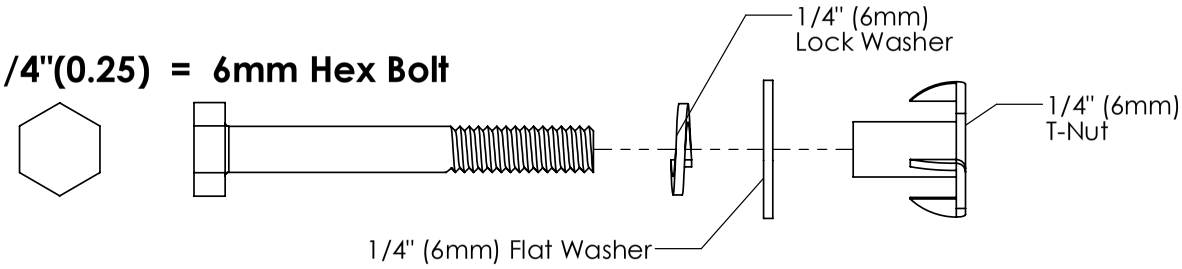

1/4"(0.25) = 6mm Lag Screw

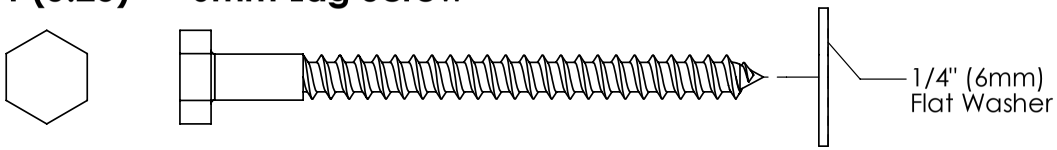

5/16"(.31) = 8mm Lag Screw

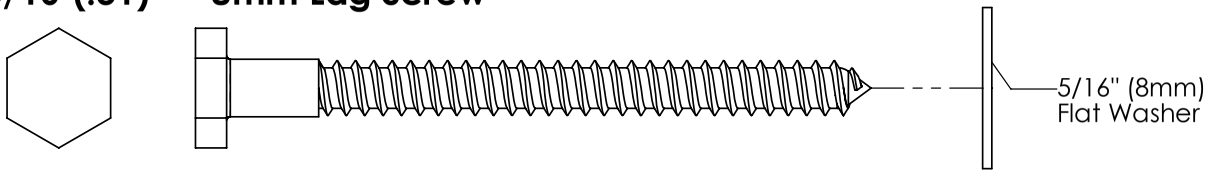

3/8"(.38) = 9.5mm Lag Screw

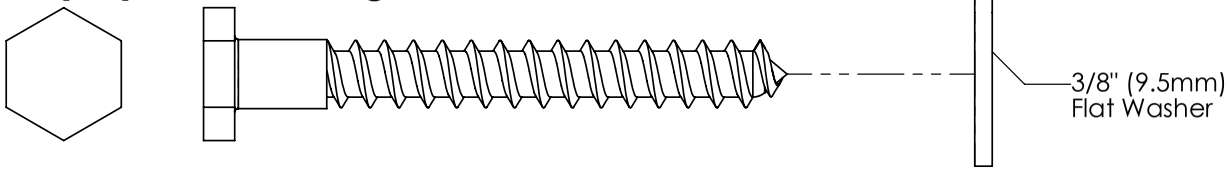

HARDWARE LENGTH CHART

inches	*vs millimetres*
6	152
5½	140
5	127
4½	114
4	102
3½	89
3	76
2½	64
2	51
1½	38
1¼	32
1-1/8	29
1	25.4
7/8	22
3/4	19
1/2	12.7

DIAMETER CONVERSION

1 inch = 25.4mm

For example:

BOLT DIAMETER 5/16 (0.31) inches

0.31 inches x 25.4mm = 8mm

LENGTH CONVERSION

1 inch = 25.4mm

For example:

BOLT LENGTH 4½ (4.5) inches long

4.5 inches x 25.4mm = 114mm long

SOLO)WAVE DESIGN WOOD PROFILES

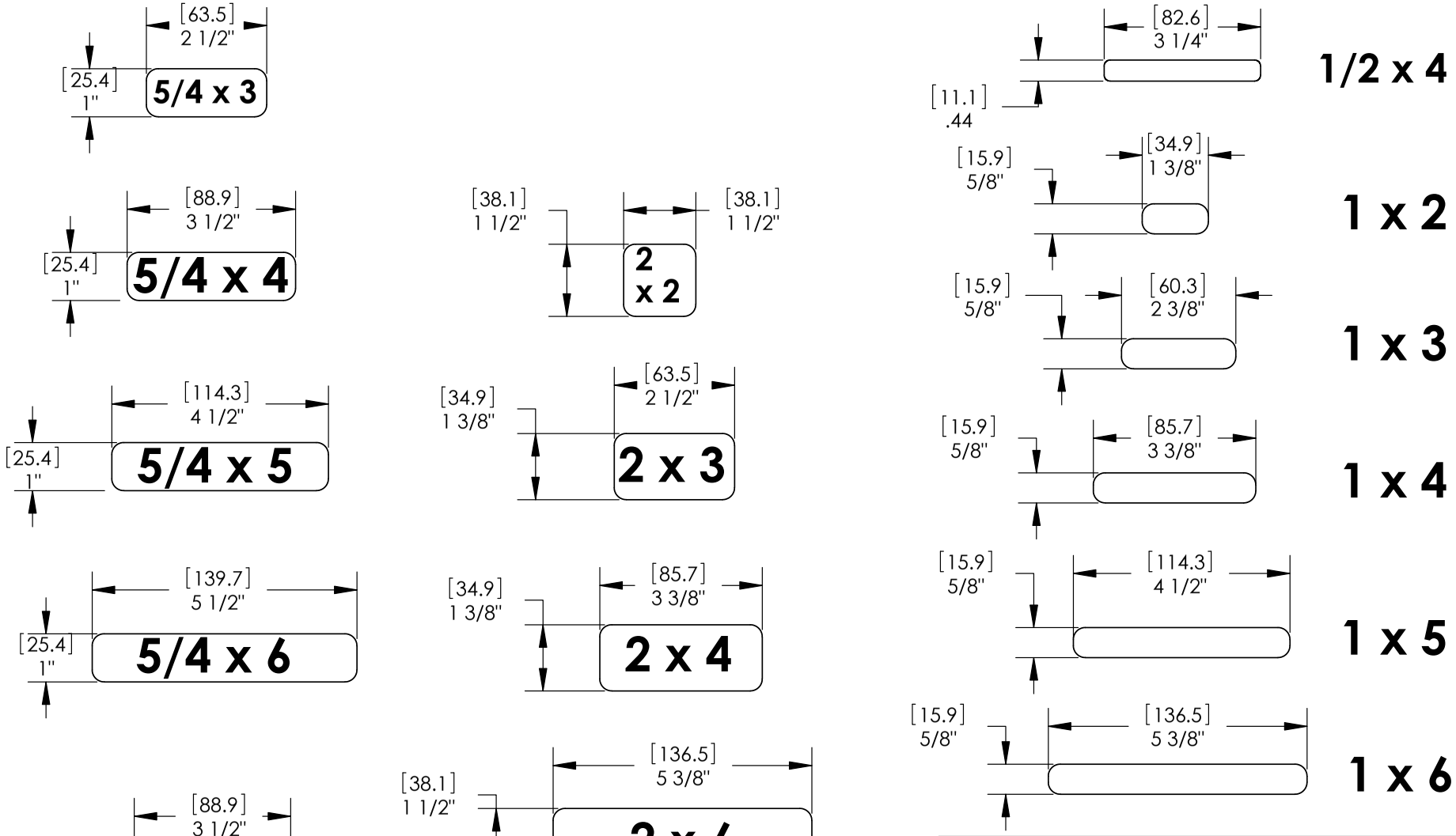

Dimensions in brackets [mm] represent millimetres.

LENGTH CONVERSION

1 inch = 25.4mm

For example:

BOARD LENGTH 59¼ (59.25) inches

59.25 inches x 25.4mm = 1505mm

support@cedarsummitplay.com

Part Identification (Reduced Part Size)

Nominal Size	Actual Size
3/8 x 3-1/2	3/8 x 3-1/2
1/2 x 4	5/8 x 3-1/4
1 x 2	5/8 x 1-3/8
1 x 3	5/8 x 2-3/8
1 x 4	5/8 x 3-3/8

4pc. - **2545** - CE Siding 3/8 x 3-1/2 x 35-7/8" - 3632545 - Box 2

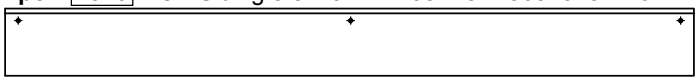

12pc. - **1503** - Wall Board 1/2 x 4 x 20" - 3631503 - Box 1&2

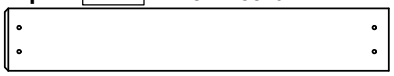

2pc. - **2535** - Clock Roof Support 1 x 2 x 18-1/8" - 3632535 - Box 2

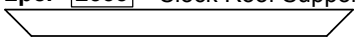

2pc. - **2550** - Counter Top 1 x 2 x 29-1/8" - 3632550 - Box 2

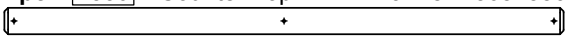

2pc. - **6836** - Counter Side - 5/8 x 2 x 6-7/8" - 38036836 - Box 2

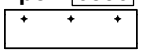

1pc. - **2549** - Counter Front 1 x 3 x 29-1/8" - 3632549 - Box 2

2pc. - **2544** - Counter Middle 1 x 4 x 6-1/8" - 3632544 - Box 2

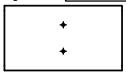

1pc. - **2551** - Clock Roof B 1 x 4 x 18-1/8" - 3632551 - Box 2

1pc. - **2543** - Clock Roof A 1 x 4 x 18-3/4" - 3632543 - Box 2

2pc. - **1227** - CE Wall Board 1 x 4 x 20" - 3631227 - Box 2

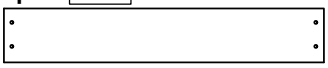

3pc. - **0304** - CE Floor Board 1 x 4 x 32-1/2" - 3630304 - Box 1

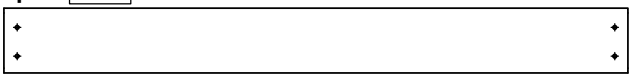

3pc. - **2533** - Kitchen Wall Support 1 x 4 x 35-7/8" - 3632533 - Box 2

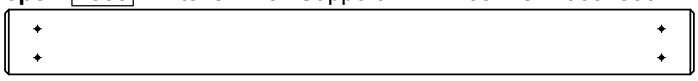

1pc. - **2034** - Wall Support 1 x 4 x 35 7/8" - 3642034 - Box 2

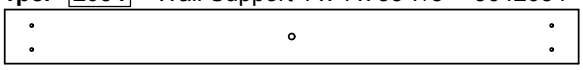

1pc. - **0839** - CE Gap Board 1 x 4 x 38-3/4" - 3630839 - Box 2

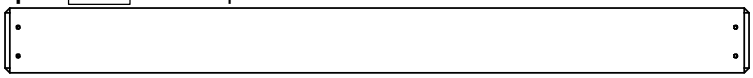

1pc. - **2536** - Kitchen Side 1 x 4 x 46-3/4" - 3632536 - Box 2

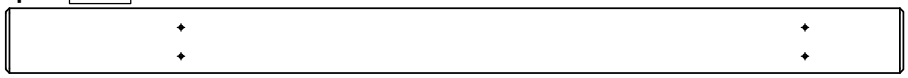

1pc. - **2552** - SW Side 1 x 4 x 46-3/4" - 3632552 - Box 2

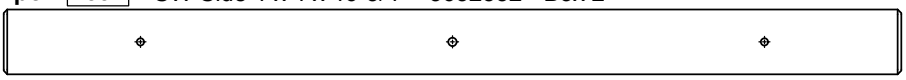

2pc. - **2532** - Top Front Back 1 x 4 x 53-1/4" - 3632532 - Box 2

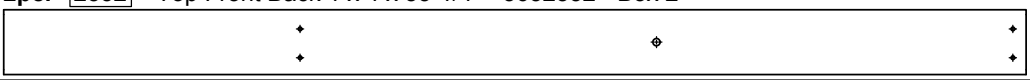

support@cedarsummitplay.com

Part Identification (Reduced Part Size)

Nominal Size	Actual Size
1 x 4	5/8 x 3-3/8
1 x 5	5/8 x 4-3/8
1 x 6	5/8 x 5-3/8

1pc. - **0353** - MK Ground 1 x 4 x 55 1/4" - 3640353 - Box 2

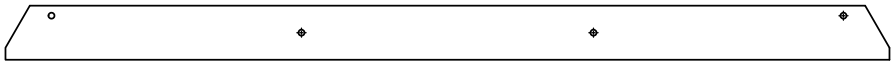

1pc. - **1895** - Floor End 1 x 5 x 35 1/4" - 3641895 - Box 2

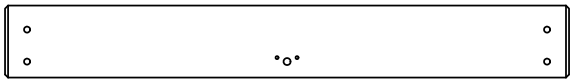

1pc. - **2032** - End Floor 1 x 5 x 35 1/4" - 3642032 - Box 2

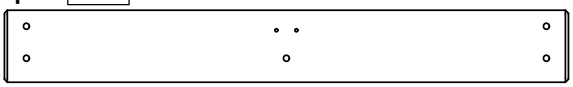

1pc. - **2538** - Ground Cafe 1 x 5 x 35-7/8" - 3632538 - Box 2

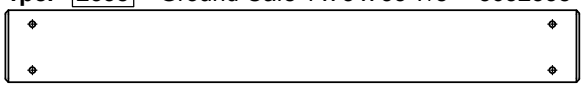

2pc. - **1768** - Lower Back 1 x 5 x 38 1/2" - 3641768 - Box 2

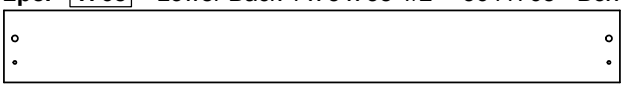

1pc. - **2037** - Front Top 1 x 5 x 38 1/2" - 3642037 - Box 2

1pc. - **2029** - Ground SW 1 x 5 x 72" - 3642029 - Box 2

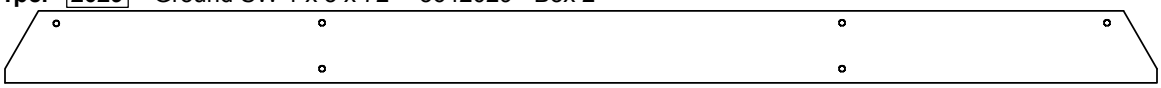

2pc. - **1779** - CE Access Board 1 x 6 x 17" - 3631779 - Box 2

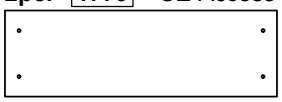

2pc. - **1778** - CE Rock Board A 1 x 6 x 17" - 3631778 - Box 2

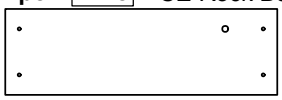

3pc. - **1777** - CE Rock Board B 1 x 6 x 17" - 3631777 - Box 1

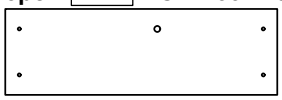

1pc. - **2547** - Table Top 1 x 6 x 31" - 3632547 - Box 1

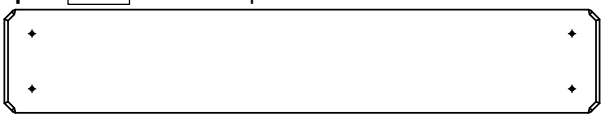

5pc. - **1889** - Floor Board 1 x 6 x 32½" - 3631889 - Box 2

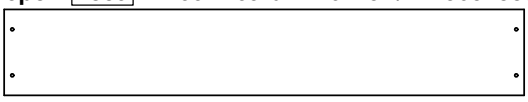

2pc. - **1890** - CE Gap Board 1 x 6 x 32½" - 3631890 - Box 2

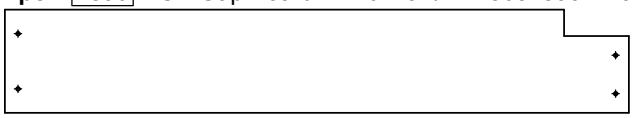

support@cedarsummitplay.com

Part Identification (Reduced Part Size)

Nominal Size	Actual Size
5/4 x 4	15/16 x 3-1/4
2 x 3	1-3/8 x 2-1/2
2 x 4	1-3/8 x 3-3/8

1pc. - **9836** - Bench Brace Top 5/4 x 4 x 6-1/2" - 38039836 - Box 2

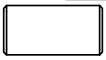

2pc. - **9136** - Bench End Support Cafe 5/4 x 4 x 7" - 38039136 - Box 2

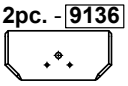

2pc. - **9936** - Bench Leg Cafe 5/4 x 4 x 11" - 38039936 - Box 1

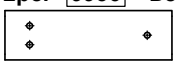

2pc. - **9236** - Bench Base Cafe 5/4 x 4 x 16" - 38039236 - Box 2

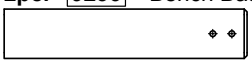

2pc. - **4836** - Bench Top Cafe 5/4 x 4 x 31-7/16" - 38034836 - Box 2

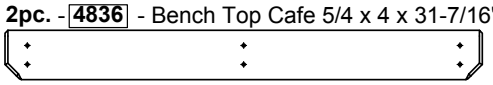

1pc. - **1903** - Floor Joist 5/4 x 3 x 38-1/2" - 3641903 - Box 2

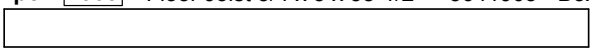

2pc. - **2548** - Gusset 5/4 x 4 x 8" - 3632548 - Box 2

2pc. - **2546** - Table Support 5/4 x 4 x 15-3/4" - 3632546 - Box 2

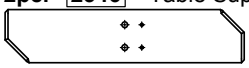

1pc. - **2534** - Back Board 5/4 x 4 x 27-1/8" - 3632534 - Box 2

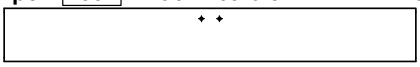

1pc. - **1894** - Back Floor 5/4 x 4 x 38 1/2" - 3641894 - Box 2

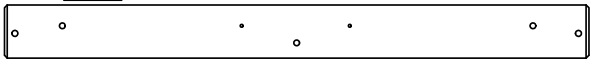

1pc. - **1862** - SW Support 5/4 x 4 x 46 1/2" - 3641862 - Box 2

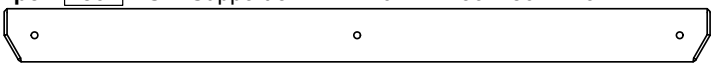

1pc. - **2537** - Counter Joist 2 x 3 x 8-1/2" - 3632537 - Box 2

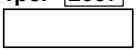

1pc. - **0312** - Gusset 2 x 3 x 16" - 3640312 - Box 2

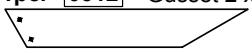

4pc. - **0369** - Lower Diagonal 2 x 3 x 37" - 3640369 - Box 2

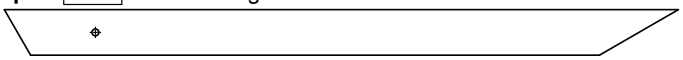

1pc. - **1908** - Front Floor 2 x 3 x 38 1/2" - 3641908 - Box 2

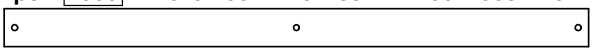

2pc. - **0349** - Rock Rail 2 x 3 x 51" - 3640349 - Box 2

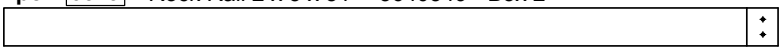

1pc. - **2531** - MK Mount 2 x 3 x 60-3/8" - 3632531 - Box 2

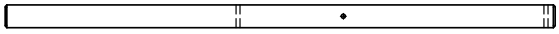

2pc. - **1367** - Post MK 2 x 3 x 70" - 3641367 - Box 2

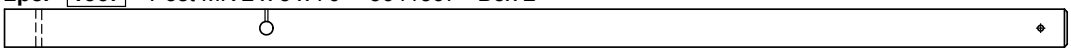

1pc. - **4919** - SW Rail Block 2 x 4 x 5 3/8" - 3644919 - Box 2

1pc. - **2539** - SW Mount 2 x 4 x 36" - 3632539 - Box 2

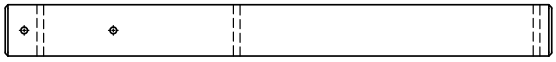

1pc. - **1856** - SW Upright 2 x 4 x 48 5/16" - 3641856 - Box 2

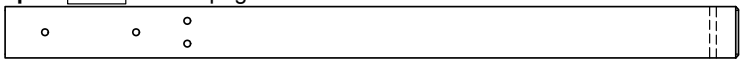

1pc. - **1565** - MK Rail Short 2 x 4 x 50" - 3641565 - Box 2

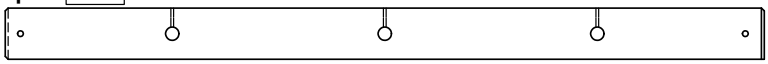

1pc. - **1943** - MK Rail Long 2 x 4 x 54" - 3641943 - Box 2

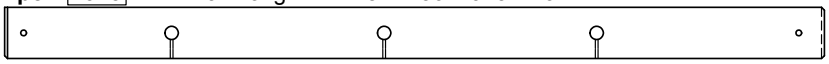

4pc. - **1931** - Post 2 x 4 x 81" - 3641931 - Box 2

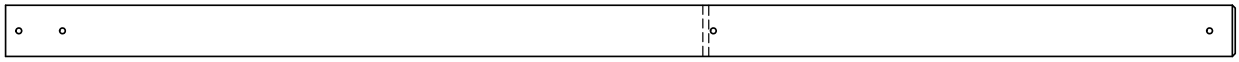

support@cedarsummitplay.com

Part Identification (Reduced Part Size)

Nominal Size	Actual Size
2 x 4	1-3/8 x 3-3/8
2 x 2	1-1/2 x 1-1/2
2 x 6	1-1/2 x 5-3/8

2pc. - **1863** - SW Post 2 x 4 x 86 11/16" - 3641863 - Box 2

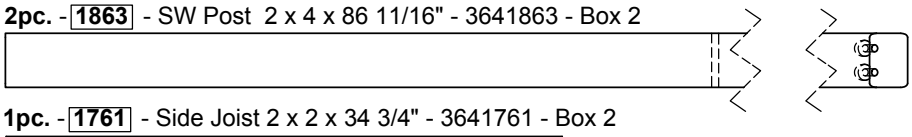

1pc. - **1761** - Side Joist 2 x 2 x 34 3/4" - 3641761 - Box 2

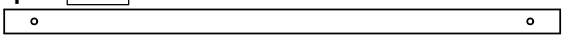

1pc. - **2540** - Top Wall Support 2 x 2 x 35-7/8" - 3632540 - Box 2

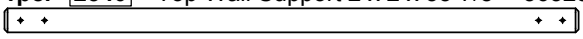

1pc. - **2541** - Roof Ridge 2 x 2 x 46-3/4" - 3632541 - Box 2

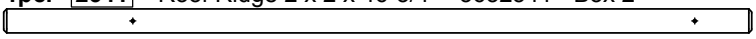

1pc. - **2542** - Roof Upright 2 x 2 x 60"- 3632542 - Box 2

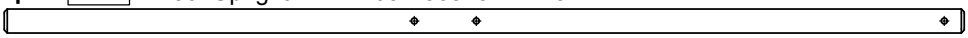

1pc. - **1825** - Back Beam 2 x 6 x 83 5/8" - 3631825 - Box 2

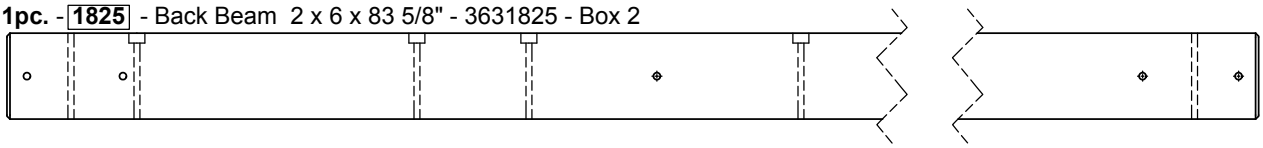

1pc. - **1826** - Front Beam 2 x 6 x 83 5/8" - 3631826 - Box 2

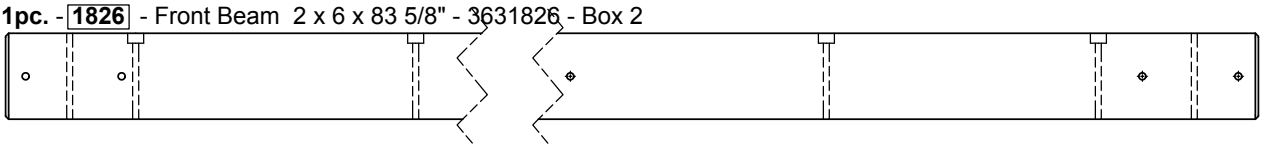

support@cedarsummitplay.com

Hardware Identification (Actual Size)

4pc. **LS1** - Lag Screw 1/4 x 1-1/2" - (9262212)

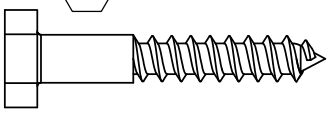

3pc. **LS2** - Lag Screw 1/4 x 2-1/2" - (9272222)

10pc. **LS3** - Lag Screw 1/4 x 3" - (9262230)

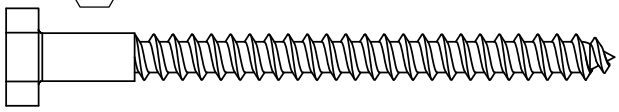

26pc. **H2** - Hex Bolt 1/4 x 2" - (9277220)

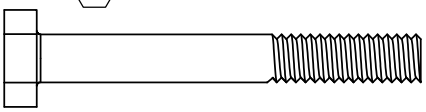

2pc. **H3** - Hex Bolt 1/4 x 2-1/2" - (9277222)

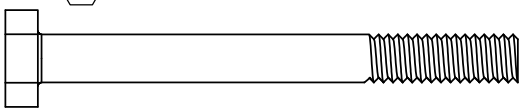

1pc. **H13** - Hex Bolt 1/4 x 3-1/2" - (9277232)

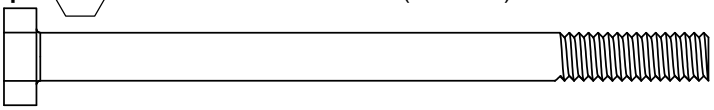

4pc. **H12** - Hex Bolt 1/4 x 3" - (9277230)

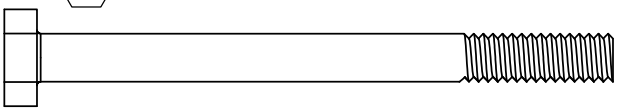

5pc. -**PB2** -Pan Bolt 1/4 x 1 1/4 - (9274211)

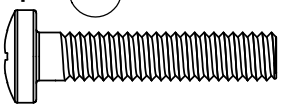

1pc. **H8** - Hex Bolt 1/4 x 4-1/4" - (9277241)

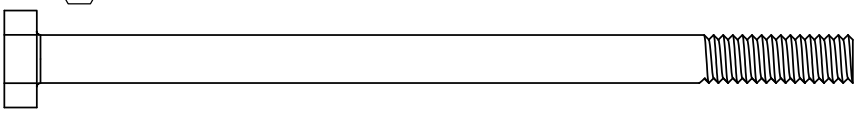

2pc. **H5** - Hex Bolt 1/4 x 4-1/2" - (9277242)

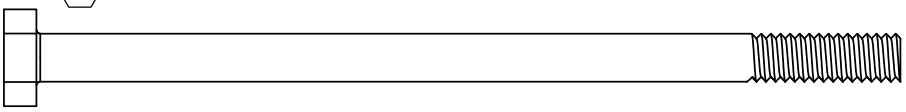

2pc. **H6** - Hex Bolt 1/4 x 4-3/4" - (9277243)

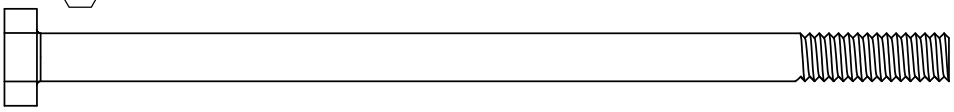

4pc. **H7** - Hex Bolt 1/4 x 5-1/2" - (9277252)

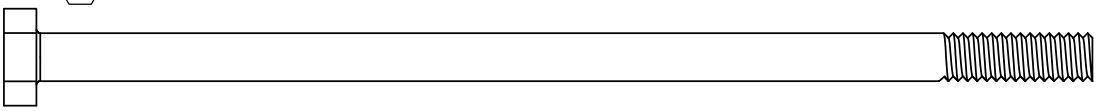

4pc. **G1** - Hex Bolt 5/16 x 1-1/2" - (9277312)

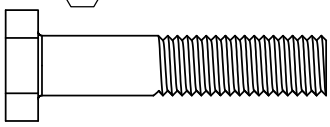

3pc. **G10** - Hex Bolt 5/16 x 3" - (9277330)

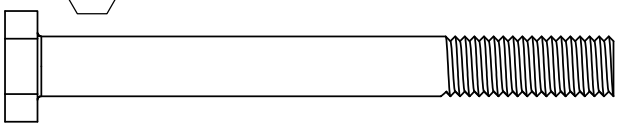

2pc. **G8** - Hex Bolt 5/16 x 2" - (9277320)

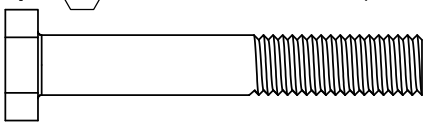

5pc. **G4** - Hex Bolt 5/16 x 4" - (9277340)

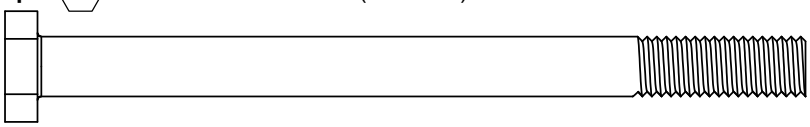

support@cedarsummitplay.com

Hardware Identification (Actual Size)

5pc. -G5 -Hex Bolt 5/16 x 4 1/2" - (9277342)

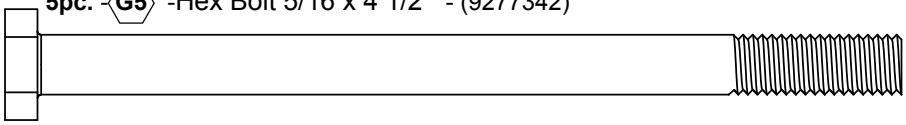

1pc. D4 -#2 x 2" Robertson Driver - (9200014)

4pc. -G7 -Hex Bolt 5/16 x 5 1/2" - (9277352)

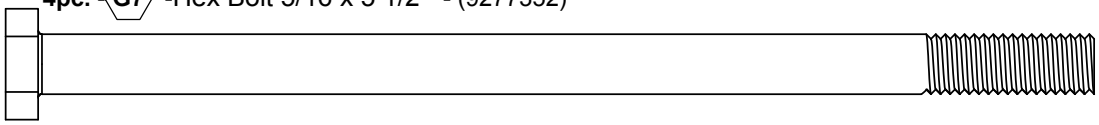

2pc. 5/16" Glider Long Bolt

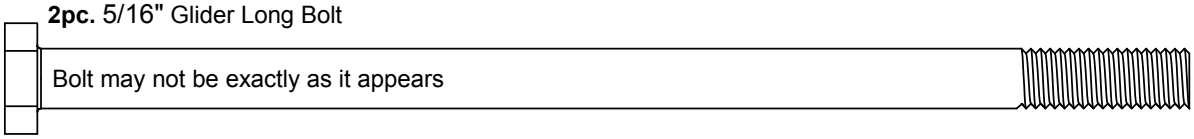

17pc. LW2 - 5/16" Lock Washer - (9253300)

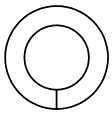

47pc. LW1 -1/4" Lock Washer - (9253200)

12pc. LN2 -5/16" Lock Nut - (9283300)

28pc. -TS -Trim Screw - #6 x 30mm - (922911)

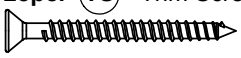

4pc. -S16 -Pan Screw #6 x 1" - (9264010)

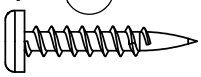

64pc. -S0 -Truss Screw #8 x 7/8" - (9229505)

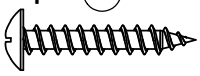

68pc. -S5 -Pan Screw #8 x 1/2" - (9264504)

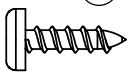

5pc. -S10 -Pan Screw #8 x 1" - (9264510)

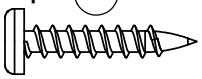

14pc. -S6 -Pan Screw #12 x 1" - (9264610)

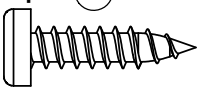

19pc. -S7 -Pan Screw #12 x 2" - (9264620)

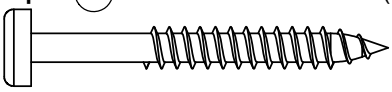

59pc. FW1 -1/4" Flat Washer - (9251200)

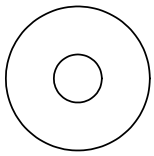

42pc. FW2 - 5/16" Flat Washer - (9251300)

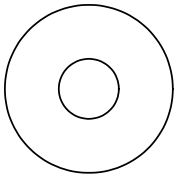

44pc. FW3 -#8 Flat Washer - (9251500)

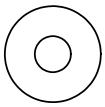

19pc. FW0 -3/16" Flat Washer - (9251100)

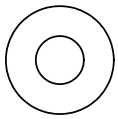

5pc. BN1 -1/4" Barrel Nut - (9248200)

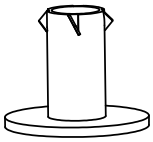

42pc. TN1 - 1/4" T - Nut -(9285200)

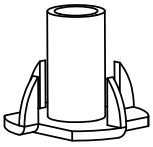

17pc. TN2 -5/16" T- Nut - (9285300)

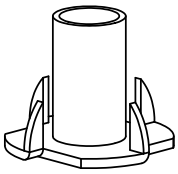

20pc. -S1 -Flat Head Screw #8 x 1 1/8" - (52042514)

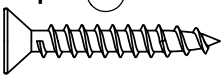

105pc. -S2 -Flat Head Screw #8 x 1 1/2" - (9260512)

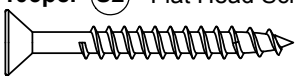

22pc. -S15 -Flat Head Screw #8 x 1 3/4" - (9260513)

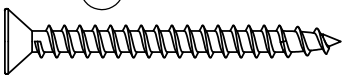

30pc. -S3 -Flat Head Screw #8 x 2 1/2" - (9290522)

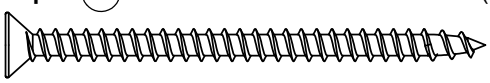

8pc. -S4 -Flat Head Screw #8 x 3" - (9290530)

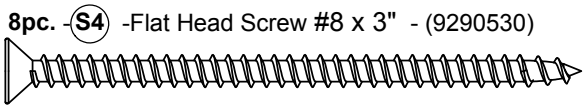

support@cedarsummitplay.com

Part Identification (Reduced Part Size)

3pc. - **578** - Dowel Tennon 1 1/8 x 15 7/8" - 3681578 - Box 1

1pc. - **858** - Dowel Tennon 1 1/8 x 18 5/8" - 3681858 - Box 1

6pc. - **0318** - Ground Stake 1 1/4 x 1 1/2 x 14" - 3650318 - Box 1

1X 3533860
39" Glider Rope & Chain
(4pk) w. welded chain

1X 3320132
Flag and Pole (2Pk)

1X 3320124 Clock
Assembly

1X 9320357
Cedar Summit
I.D Plaque

1X 3200184
Triangle Plate (4pk)
Green

2X Glider End

1X 3320386 Rocks (5pk)
3-Green 2-Yellow

1X 9200140
MB Mount Strap
Green

3X 9200300
MK Bracket
Green

1X 3201305
Monkey Bracket Set

1X Glider Seat

1X
3320969
Deluxe Kitchen Set

2X 3724943
42" Belt Swing Yellow
w.welded chain

1X 3200202
Glider Hanger (2pk)

1X 3200166
Corner Brace Set
(6pk) Green

1 x 3753280
Laurentian
Canopy Set

1 x 9750180 Wrap
Around Tarp I
Green

1 x 9750124
Clock Tarp
Green

1 x 9750181 Wrap
Around Tarp II
Green

1 x 9753280
Laurentian Canopy
Green

1X 3202000
Swing Hanger
Bolt Thru. (4pk)

1X 3310248
Slide 48" High Rail - Yellow

support@cedarsummitplay.com

Step 1: Inventory Parts - Read This Before Starting Assembly

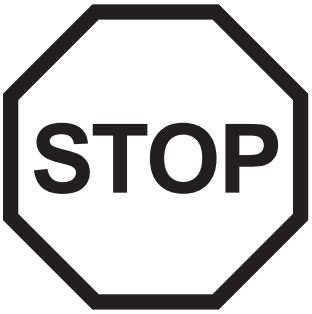

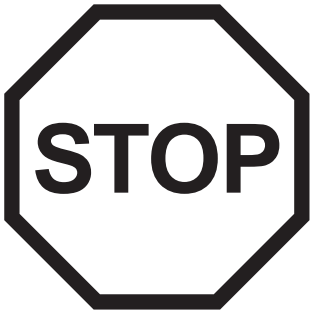

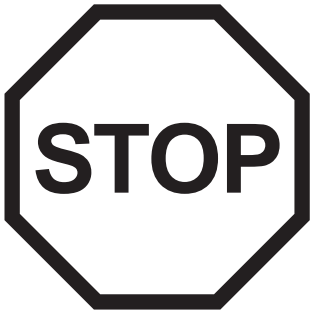

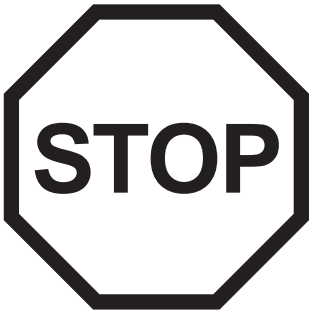

A. This is the time for you to inventory all your hardware, wood and accessories, referencing the parts identification sheets. This will assist you with your assembly.

- The wood pieces will have the four digit key number stamped on the ends of the boards. The wood pieces are referenced throughout the instructions with this number.
- Please refer to Page 6 for proper hardware assembly.
- Each step indicates which bolts and/or screws you will need for assembly, as well as any flat washers, lock washers, t-nuts or lock nuts.

B. If there are any missing or damaged pieces or you need assistance with assembly please contact the Consumer Relations Department directly. Call us before going back to the store.

1-877-966-3738
support@cedarsummitplay.com

C. Read the assembly manual completely, paying special attention to ANSI warnings; notes; and safety/maintenance information on pages 1 - 6.

D. Before you discard your cartons fill out the form below.

- The carton I.D. stamp is located on the end of each carton. The tracking number is located on the ID Plaque.
- Please retain this information for future reference. You will need this information if you contact the Consumer Relations Department.

MODEL NUMBER: **F23280**

CARTON I.D. STAMP: __ __ __ __ __ 14459 ___ (Box 1)

CARTON I.D. STAMP: __ __ __ __ __ 14459 ___ (Box 2)

CARTON I.D. STAMP: __ __ __ __ __ 14459 ___ (Box 3)

CARTON I.D. STAMP: __ __ __ __ __ 14459 ___ (Box 4)

CARTON I.D. STAMP: __ __ __ __ __ 14459 ___ (Box 5)

CARTON I.D. STAMP: __ __ __ __ __ 14459 ___ (Box 6)

TRACKING NUMBER (from ID Plaque): _____

Step 2: Rock Wall Assembly

Note: The holes in the rock boards must orient to the top of the boards.

Fig. 2.1

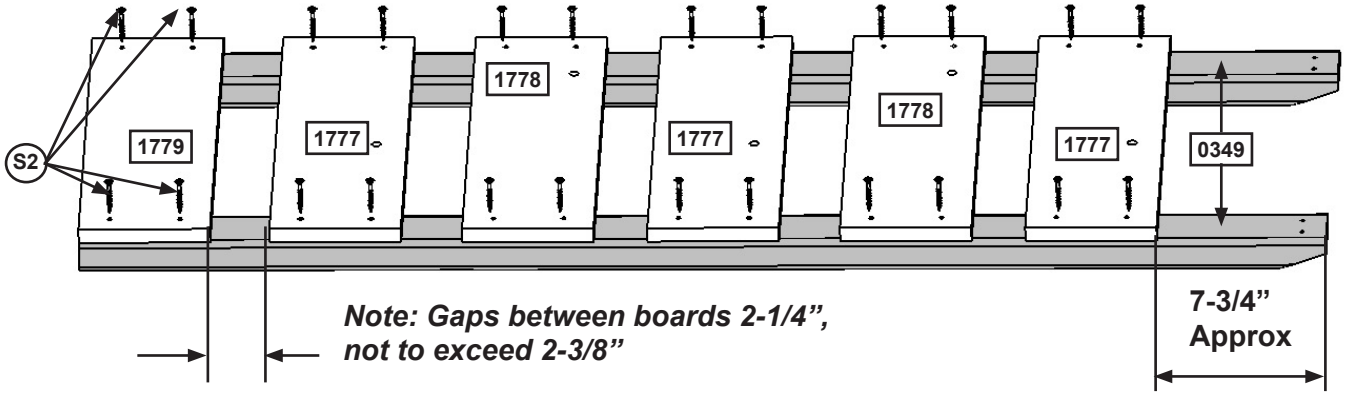

A: Lay 2 (0349) Rock Rails down, side by side with angled edges facing down. (fig. 2.1)

B: Place (1779) CE Access Board on the bottom of each (0349) Rock Rail as shown in fig. 2.1. Make sure (1779) CE Access Board is flush to the outside and bottom edges of each (0349). Attach using 4 (S2) #8 x 1-1/2" Wood Screws.

C: 7-3/4" down from the top of both (0349) Rock Rails place 1 (1777) CE Rock Board B, making sure the sides are flush to the outside edges of each (0349) Rock Rail. Attach using 4 (S2) #8 x 1-1/2" Wood Screws. (fig. 2.1)

D: In between the (1779) CE Access Board and (1777) CE Rock Board B stagger 2 (1778) and 2 (1777) CE Rock Boards A & B using 4 (S2) #8 x 1-1/2" Wood Screws per board. Placing them as shown in fig. 2.1, this will prevent rocks from forming a straight line. Make sure the boards are evenly spaced and do not exceed 2-3/8" between boards.

Fig. 2.2

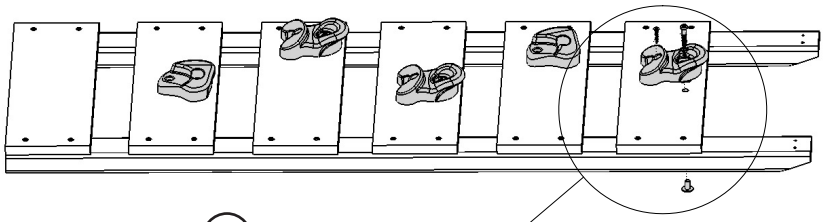

Fig. 2.3

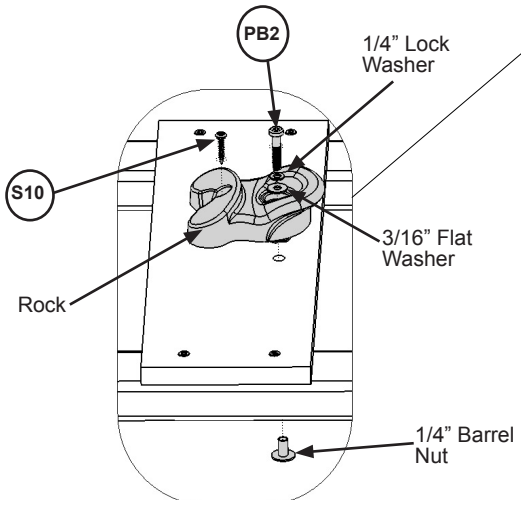

E: Place 1 rock on each (1777) and (1778) CE Rock Board A & B (fig. 2.2) and attach using 1 (PB2) 1/4 x 1-1/4" Pan Bolt (with lock washer, flat washer and barrel nut) and 1 (S10) #8 x 1" Pan Screw per rock. The Screw must be in the hole directly under the Pan Bolt, it will stop the rock from spinning. (fig. 2.3)

Wood Parts	Hardware	Other Parts
1 x 1779 CE Access Board 1 x 6 x 17"	24 x S2 #8 x 1-1/2" Wood Screw	5 x Rocks (3 green/2 yellow)
3 x 1777 CE Rock Board B 1 x 6 x 17"	5 x S10 #8 x 1" Pan Screw	
2 x 1778 CE Rock Board A 1 x 6 x 17"	5 x PB2 1/4 x 1-1/4 Pan Bolt (1/4" lock washer, 3/16" flat washer & 1/4" barrel nut)	
2 x 0349 Rock Rail 2 x 3 x 51"		

support@cedarsummitplay.com

Step 3: Swing Beam Assembly

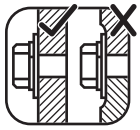

Fig. 3.4

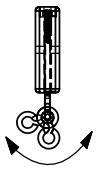

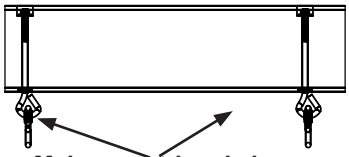

⚠WARNING: For your child's safety, orientate the swing hangers as shown to ensure your swing will have proper swing motion when installed. Failure to do so could result in premature failure of the swing hanger or swing chain.

A: In the middle holes of (1825) Back Beam install 2 Bolt-Thru Swing Hangers (fig. 3.1) making sure the swing hangers are oriented in the direction shown in fig. 3.4 to maintain proper swing motion.

B: In the end holes of (1826) Front Beam install 2 Bolt-Thru Swing Hangers (fig. 3.1) making sure the swing hangers are oriented in the direction shown in fig. 3.4 to maintain proper swing motion.

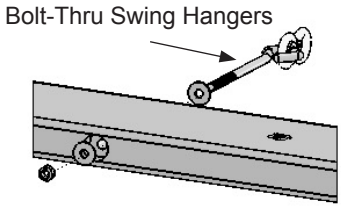

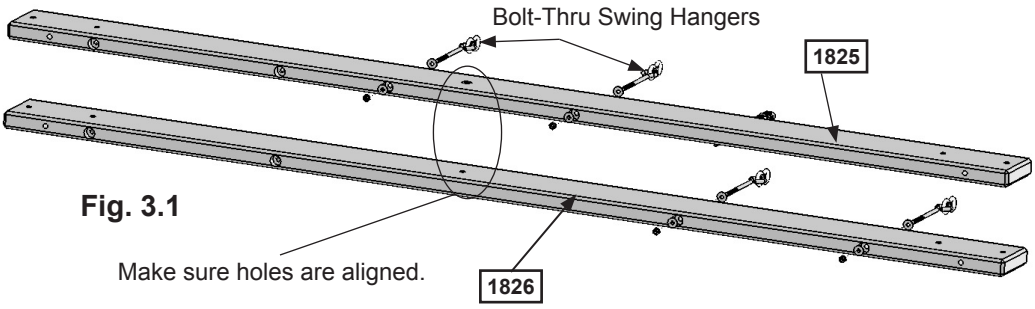

Fig. 3.1

C: Attach 1 Triangle Plate to the ends of each (1826) Front Beam and (1825) Back Beam using 1 (G1) 5/16 x 1-1/2" Hex Bolt (with lock washer, flat washer and t-nut) per triangle plate in the hole indicated in fig. 3.2 & 3.3. **Correct hole usage is very important.**

Fig. 3.2

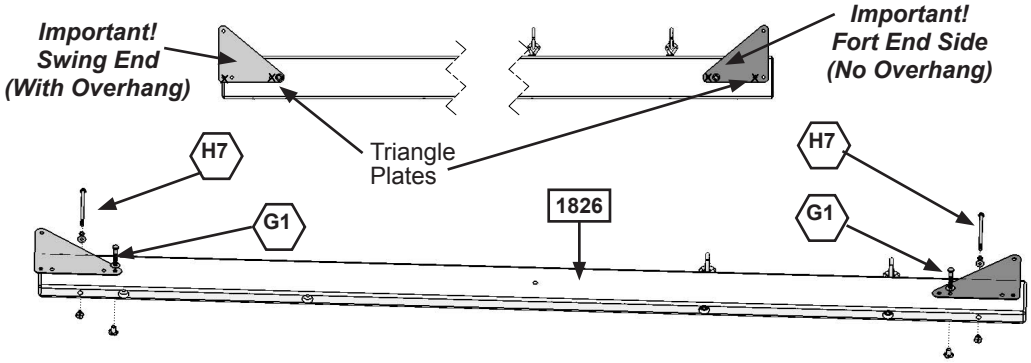

Fig. 3.3

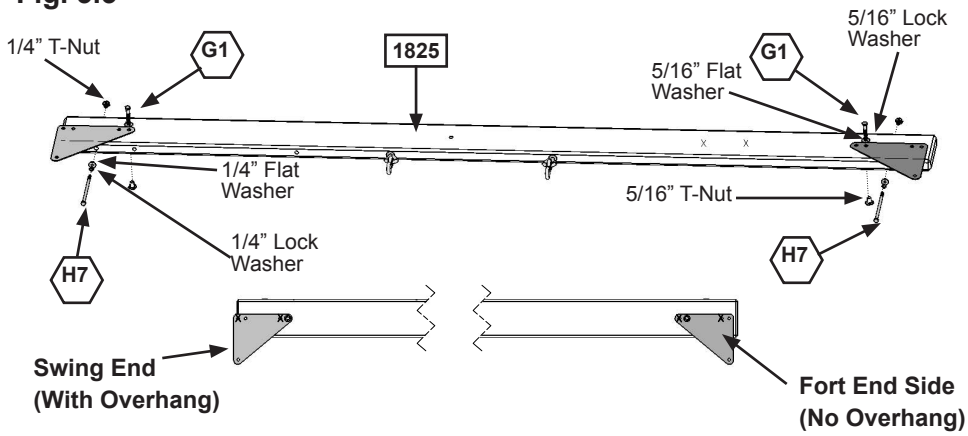

D: Attach 1 (H7) 1/4 x 5-1/2" Hex Bolt (with lock washer, flat washer and t-nut) to the ends of each (1826) Front Beam and (1825) Back Beam. The bolts do not attach to anything, but **MUST** be installed to the beams to prevent splitting and checking of wood. (fig. 3.2 & 3.3)

Wood Parts

- 1 x 1826 **Front Beam 2 x 6 x 83-5/8"**
- 1 x 1825 **Back Beam 2 x 6 x 83-5/8"**

Hardware

- 4 x H7 **1/4 x 5-1/2" Hex Bolt (1/4" flat washer, 1/4" lock washer, 1/4" t-nut)**
- 4 x G1 **5/16 x 1-1/2" Hex Bolt (5/16" flat washer, 5/16" lock washer, 5/16" t-nut)**

Other Parts

- **1 x Bolt-Thru Swing Hangers (pkg of 4)**
- **1 x Triangle Plate (pkg of 4)**

support@cedarsummitplay.com

Step 4: Swing End Assembly

A: Attach 2 (1863) SW Posts to (1856) SW Upright using 2 (G4) 5/16 x 4” Hex Bolts (with lock washer, flat washer and t-nut). (fig. 4.1)

Fig. 4.1

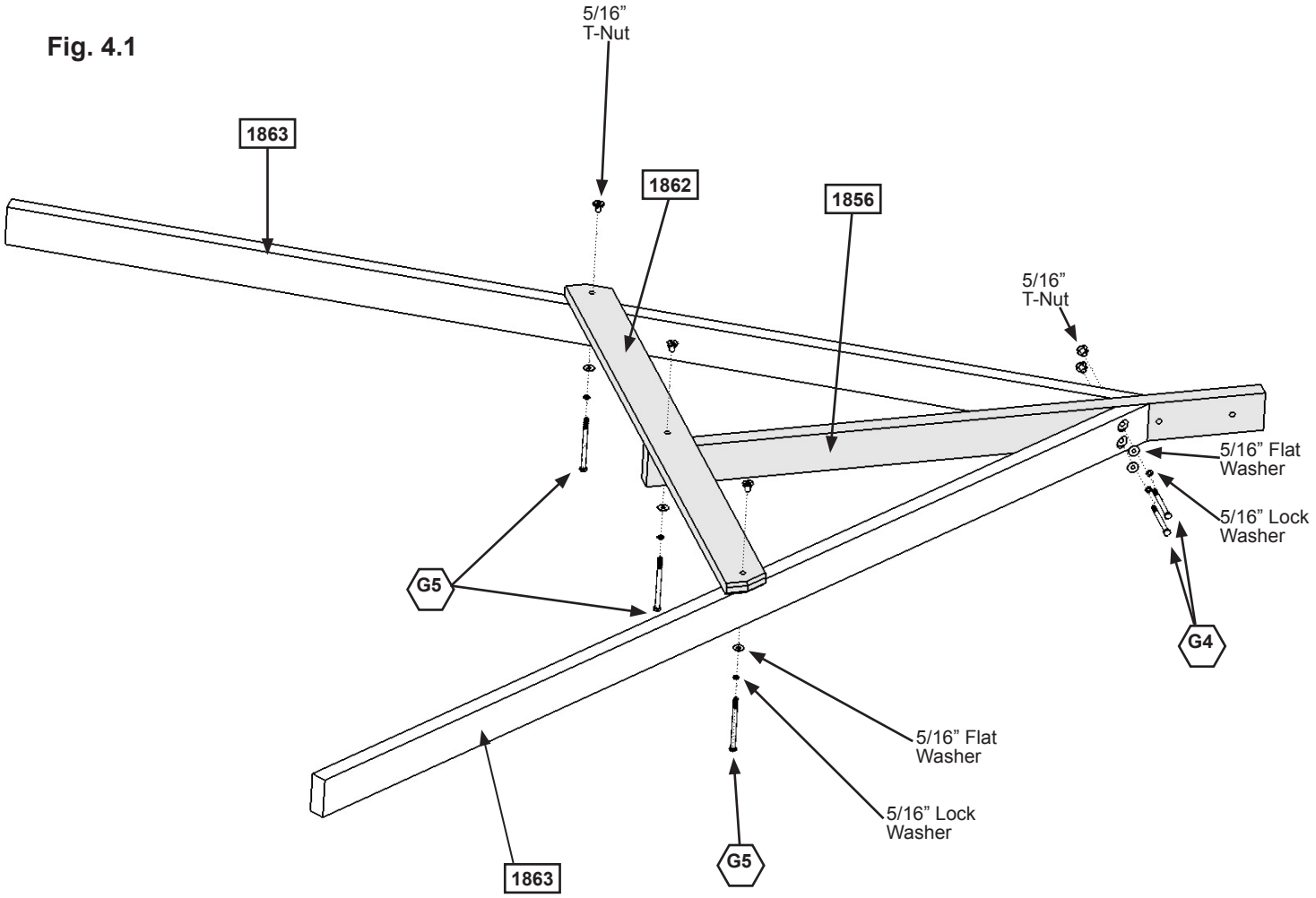

B: Attach (1862) SW Support to both (1863) SW Posts and (1856) SW Upright using 3 (G5) 5/16 x 4-1/2” Hex Bolts (with lock washer, flat washer and t-nut). (fig. 4.1)

Wood Parts	Hardware
2 x 1863 **SW Post 2 x 4 x 86-11/16”**	2 x G4 **5/16 x 4” Hex Bolt (5/16” lock washer, 5/16” flat washer, 5/16” t-nut)**
1 x 1862 **SW Support 5/4 x 4 x 46-1/2”**	
1 x 1856 **SW Upright 2 x 4 x 48-5/16”**	3 x G5 **5/16 x 4-1/2” Hex Bolt (5/16” lock washer, 5/16” flat washer, 5/16” t-nut)**

support@cedarsummitplay.com

Step 5: Attach Swing End to Swing Beam

A: Place (4919) SW Rail Block in the centre between (1826) Front Beam and (1825) Back Beam and attach with 1 (H8) 1/4 x 4-1/4” Hex Bolt (with lock washer, flat washer and t-nut). (fig. 5.1 & 5.2)

Fig. 5.1

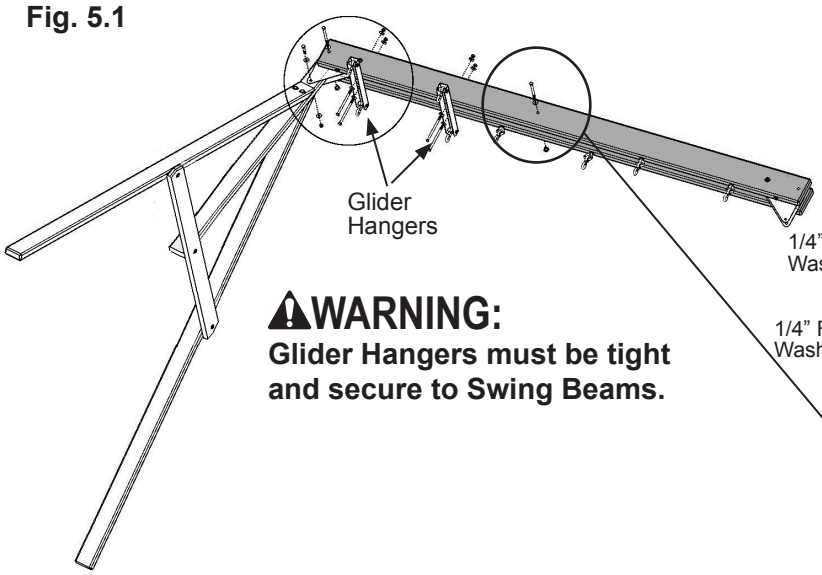

⚠WARNING:
Glider Hangers must be tight and secure to Swing Beams.

Fig. 5.2

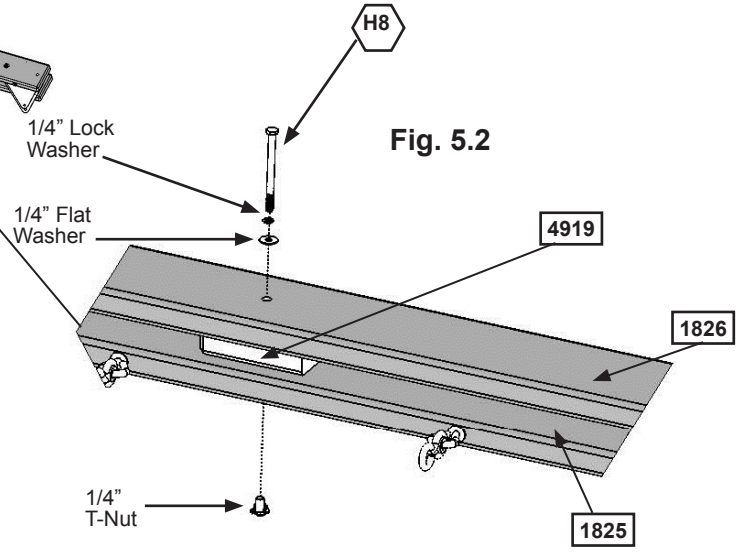

B: Attach Swing End Assembly to the side of the Swing Beam Assembly with the overhang (fig. 5.3 & 5.4) using 1 (G5) 5/16 x 4-1/2” Hex Bolt (with lock washer, flat washer and t-nut) in the top hole of Triangle Plate and 1 (G8) 5/16 x 2” Hex Bolt (with 2 flat washers and lock nut) in the bottom hole of Triangle Plate. (fig. 5.3) Make sure Swing End Assembly flares out at an angle. (fig. 5.4)

C: Attach 2 Glider Hangers to the Swing Beam Assembly using 2 (G7) 5/16 x 5-1/2” Hex Bolt (with 2 flat washers & lock nut) per Glider Hanger. (fig. 5.1 & 5.3)

Fig. 5.4

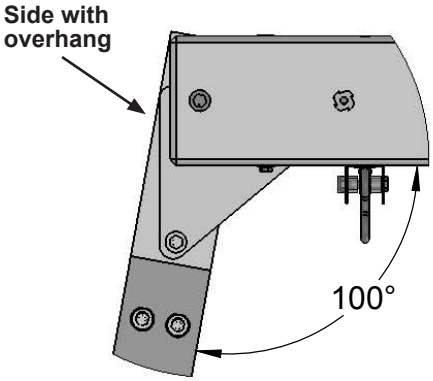

Fig. 5.3

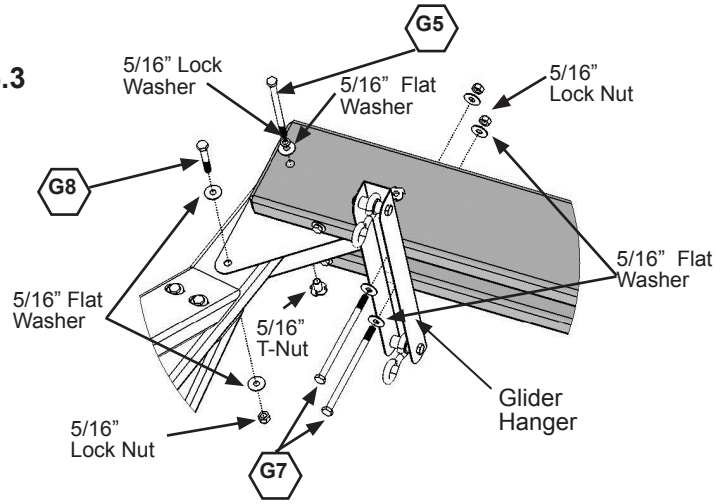

Wood Parts	Hardware	Other Parts
1 x 4919 SW Rail Block 2 x 4 x 5-3/8”	1 x H8 1/4 x 4-1/4” Hex Bolt (1/4” lock washer, 1/4” flat washer, 1/4” t-nut)	2 x Glider Hangers
	1 x G5 5/16 x 4-1/2” Hex Bolt (5/16” lock washer, 5/16” flat washer, 5/16” t-nut)	
	4 x G7 5/16 x 5-1/2” Hex Bolt (5/16” flat washer x2, 5/16” lock nut)	
	1 x G8 5/16 x 2” Hex Bolt (5/16” flat washer x2, 5/16” lock nut)	

support@cedarsummitplay.com

Step 6: Cafe Bench Assembly Part 1

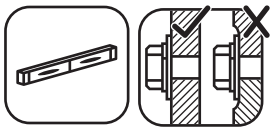

A: Flush to the top of (9936) Bench Leg Cafe place (9136) Bench End Support Cafe, angled corners facing down and centred on the legs. Attach with 1 (H2) 1/4 x 2” Hex Bolt (with lock washer, flat washer and t-nut). Make sure the top of (9136) Bench End Support Cafe is level then attach with 2 (S2) #8 x 1-1/2” Wood Screws as shown in fig. 6.1.

B: Flush to the outside edge of (9936) Bench Leg Cafe attach (9236) Bench Base Cafe with 2 (H2) 1/4 x 2” Hex Bolts (with lock washer, flat washer and t-nut) as shown in fig. 6.1.

C: Repeat Steps A and B to create a second Bench Leg Assembly so it is opposite to the first Bench Leg Assembly. (fig. 6.2)

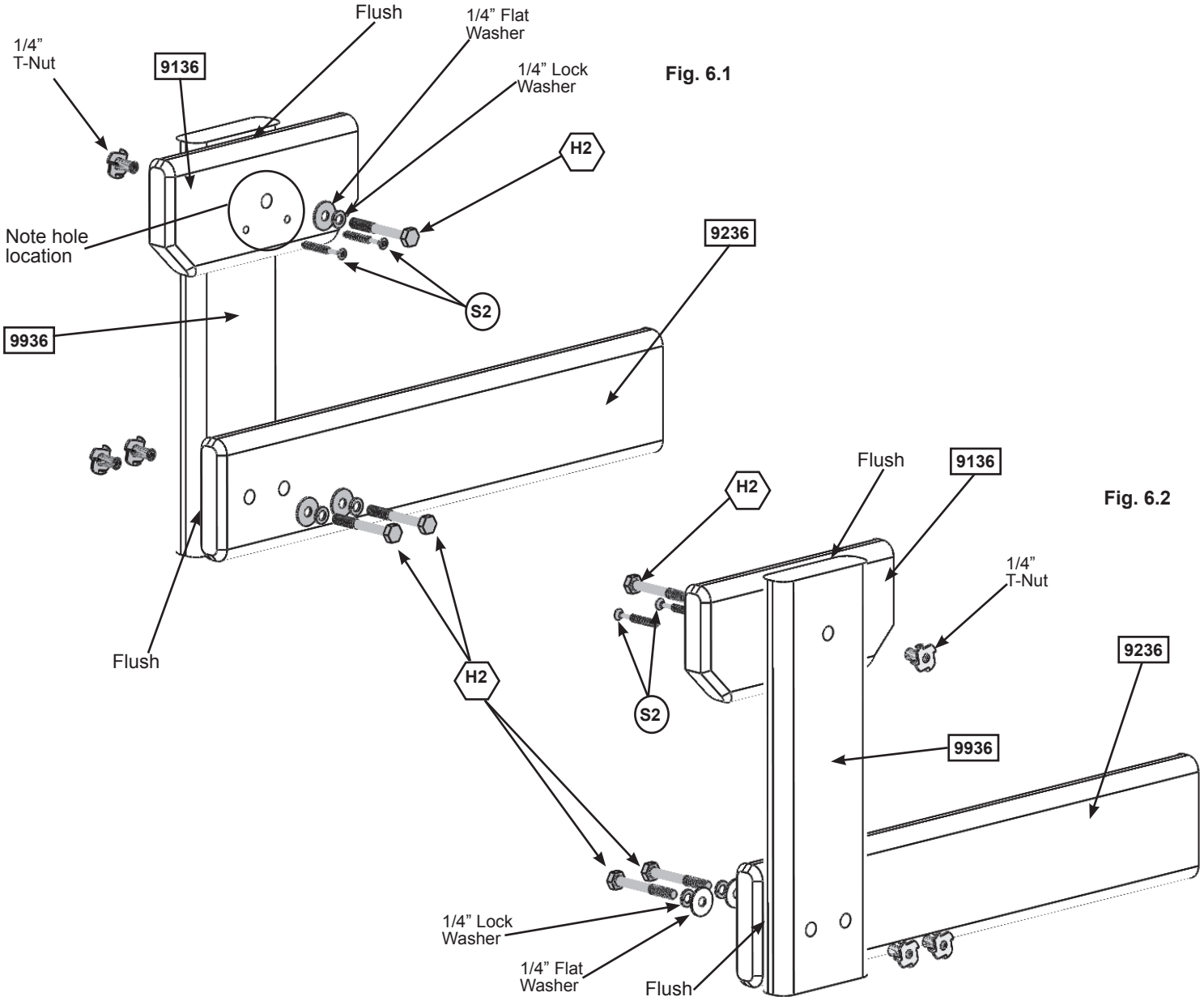

Fig. 6.1

Fig. 6.2

Wood Parts

- 2 x 9136 **Bench End Support Cafe 5/4 x 4 x 7”**
- 2 x 9936 **Bench Leg Cafe 5/4 x 4 x 11”**
- 2 x 9236 **Bench Base Cafe 5/4 x 4 x 16”**

Hardware

- 6 x H2 **1/4 x 2” Hex Bolt (1/4” lock washer, 1/4” flat washer, 1/4” t-nut)**
- 4 x S2 **#8 x 1-1/2” Wood Screw**

support@cedarsummitplay.com

Step 6: Cafe Bench Assembly Part 2

D: Place 2 (4836) Bench Top Cafes on both Bench Leg Assemblies so the ends on each side hang over by 1". Outside edges of each (4836) Bench Top Cafe to be flush to outside edge of each (9136) Bench End Support Cafe. Attach each (4836) Bench Top Cafe to each (9136) Bench End Support Cafe with 4 (S15) #8 x 1-3/4" Wood Screws per board. **Note: leave a gap of 1/2" minimum between boards on both ends**. (fig. 6.3 and 6.4)

E: Centred over the pilot holes of (4836) Bench Top Cafes place (9836) Bench Brace Top underneath the boards then pre-drill with a 1/8" drill bit. Attach with 4 (S15) #8 x 1-3/4" Wood Screws. (fig. 6.3 and 6.4)

Fig. 6.3

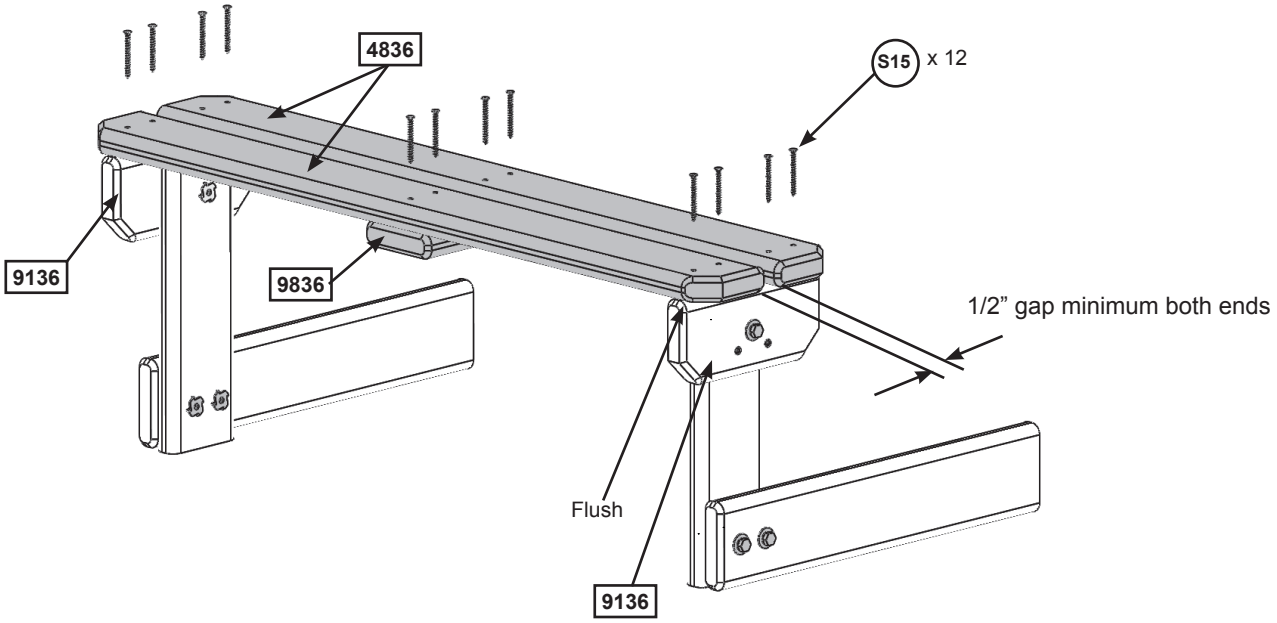

Fig. 6.4
Side View

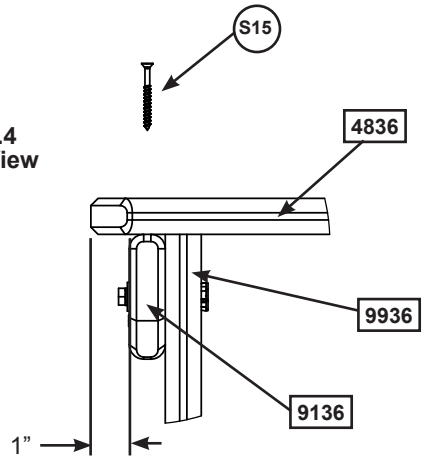

Wood Parts

2 x 4836 **Bench Top Cafe 5 x 4 x 31-7/16"**

1 x 9836 **Bench Brace Top 5 x 4 x 6-1/2"**

Hardware

12 x S15 **#8 x 1-3/4" Wood Screw**

support@cedarsummitplay.com

Step 6: Cafe Bench Assembly
Part 3

F: Attach 2 Corner Brackets flush to the top and end of each (9236) Bench Base Cafe on the inside using 2 (S5) #8 x 1/2” Pan Screws per bracket. (fig. 6.5, 6.6 and 6.7)

G: Attach 2 Corner Brackets flush to the bottom and end of each (9236) Bench Base Cafe on the outside using 2 (S5) #8 x 1/2” Pan Screws per bracket. (fig. 6.5, 6.6 and 6.8)

Fig. 6.5

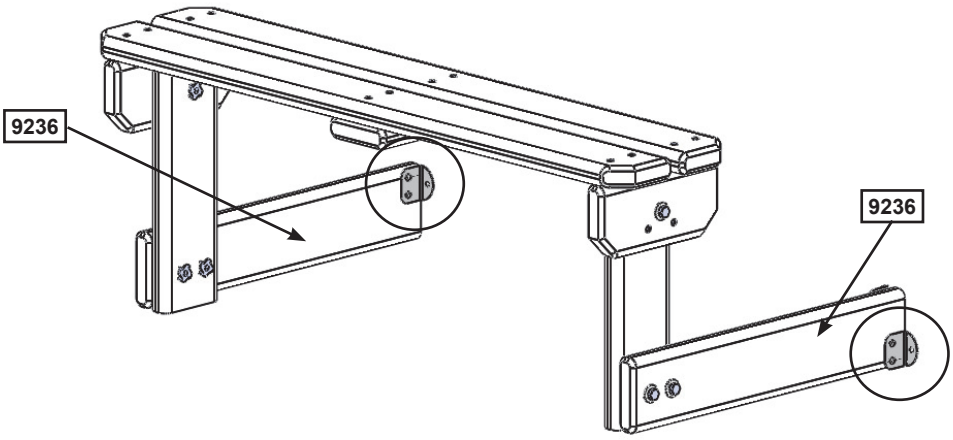

Fig. 6.7
Inside

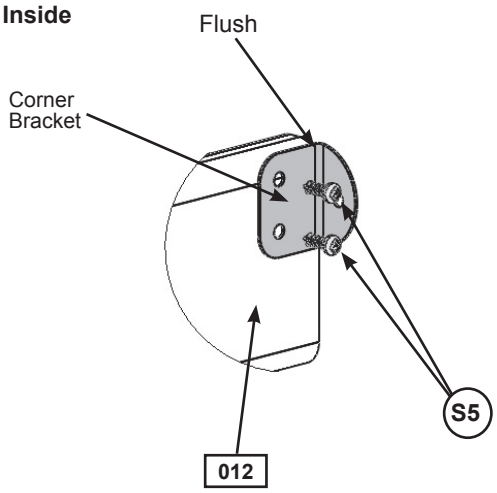

Fig. 6.8
Outside

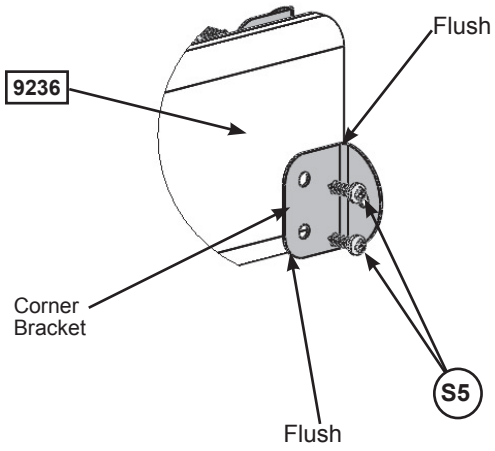

Fig. 6.6

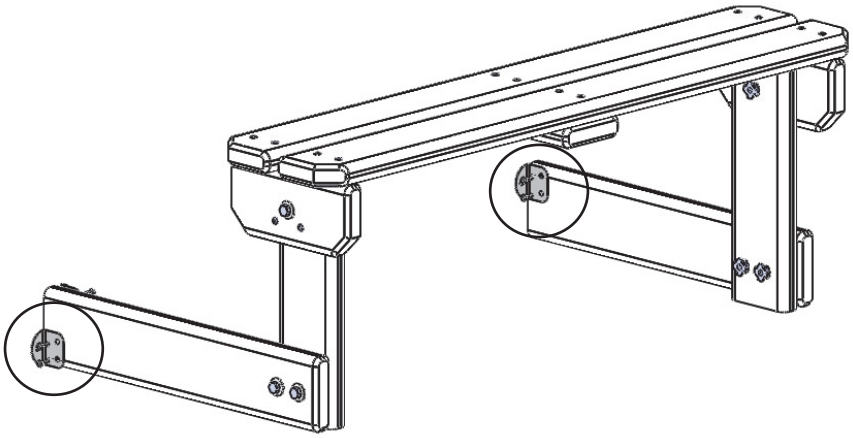

Hardware	Other Parts
8 x (S5) #8 x 1/2” Pan Screw	4 x Corner Bracket

support@cedarsummitplay.com

Step 7: Cafe Table Assembly

A: Using the pilot holes as a guide and flush to the top of each (2546) Table Support attach (2534) Back Board to each support with 2 (S3) #8 x 2-1/2” Wood Screws. Notice the holes in (2534) Back Board are at the bottom of the board. (fig. 7.1)

B: Flush to the end of each (2546) Table Support attach (2547) Table Top with 4 (S2) #8 x 1-1/2” Wood Screws as shown in fig. 7.1.

Fig. 7.1

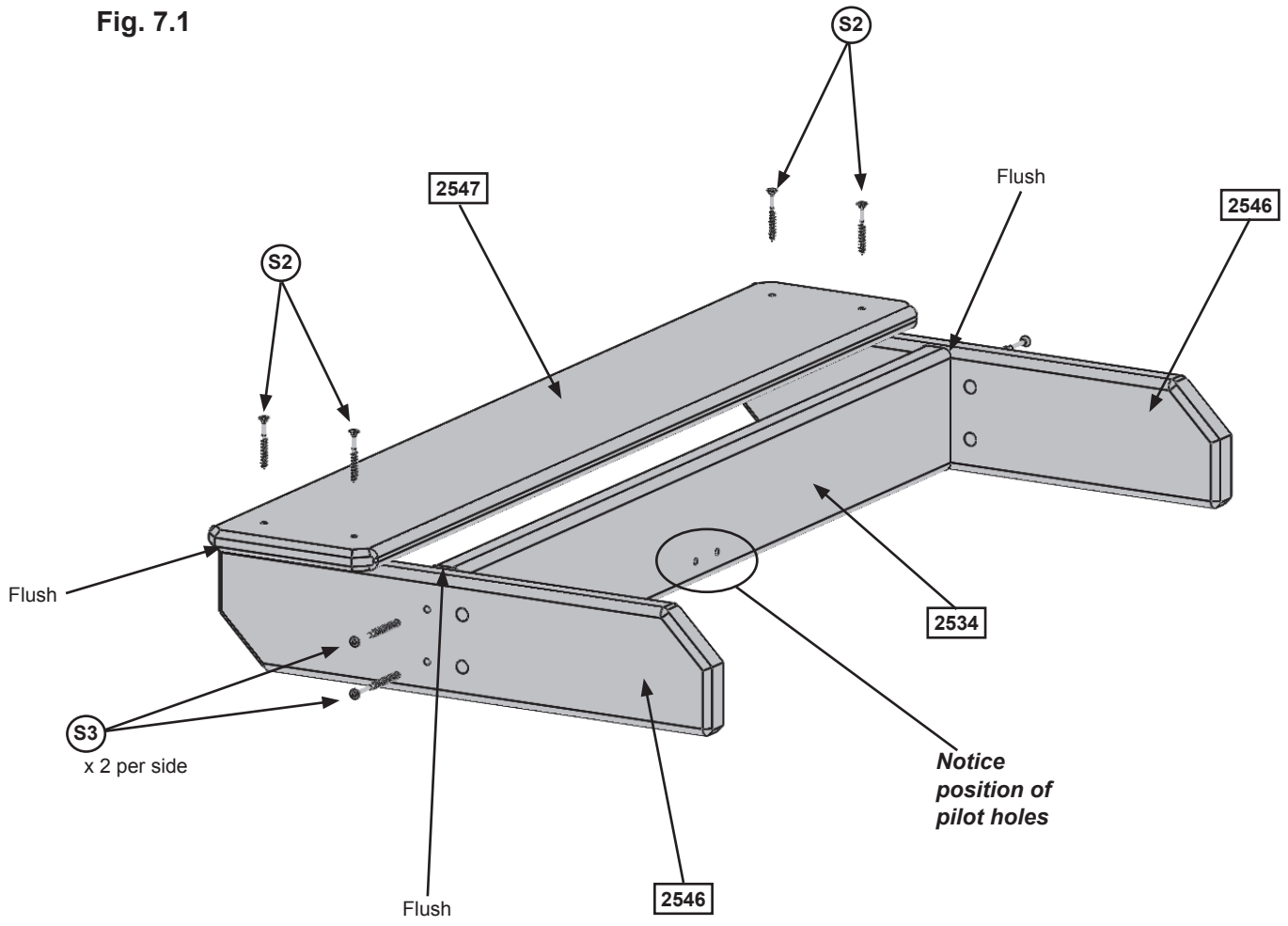

Wood Parts		
2 x	2546	Table Support 5/4 x 4 x 15-3/4”
1 x	2534	Back Board 5/4 x 4 x 27-1/8”
1 x	2547	Table Top 1 x 6 x 31”

Hardware		
4 x	S2	#8 x 1-1/2” Wood Screw
4 x	S3	#8 x 2-1/2” Wood Screw

support@cedarsummitplay.com

Step 8: Cafe Wall Assembly

A: On the ground lay flat 2 (1931) Posts then loosely attach (2538) Ground Cafe with 4 (H2) 1/4 x 2” Hex Bolts (with lock washer, flat washer and t-nut) and (2032) End Floor using 2 (H2) 1/4 x 2” Hex Bolts (with lock washer, flat washer and t-nut) in the bottom holes as shown in fig. 8.1. *Notice the hole locations in (2032) End Floor.*

B: Flush to the outside edges and at the top of each (1931) Post attach (2540) Top Wall Support with 2 (S4) #8 x 3” Wood Screws per post. (fig. 8.1)

Note: Pre-drill all holes using a 1/8” drill bit before installing the lag screws.

C: Make sure the assembly is square then fasten (2032) End Floor to (1931) Posts in the top holes using 2 (LS1) 1/4 x 1-1/2” Lag Screws (with flat washer). (fig. 8.1)

Fig. 8.1

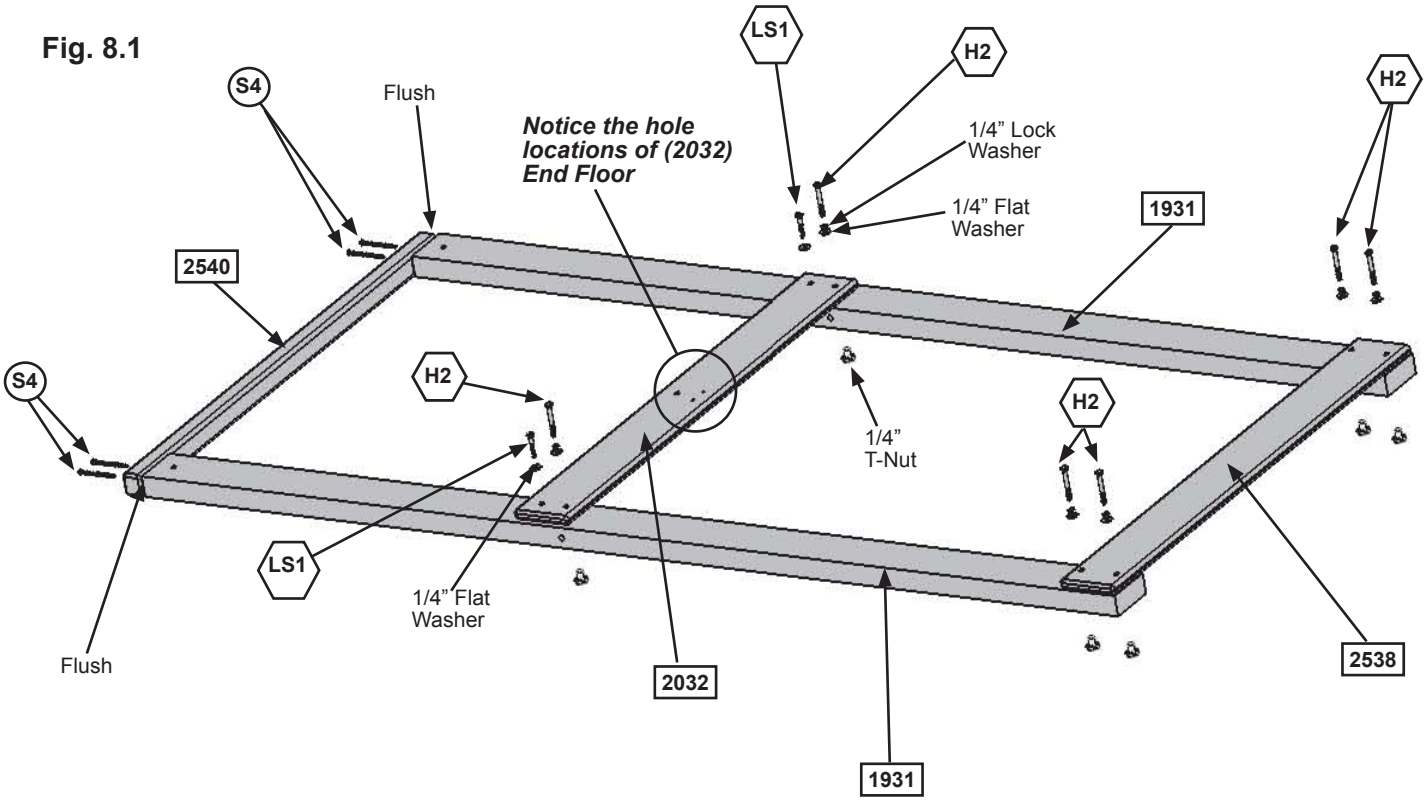

Wood Parts		
2 x	1931	Post 2 x 4 x 81”
1 x	2538	Ground Cafe 1 x 5 x 35-7/8”
1 x	2032	End Floor 1 x 5 x 35-1/4”
1 x	2540	Top Wall Support 2 x 2 x 35-7/8”

Hardware		
6 x	H2	1/4 x 2” Hex Bolt (1/4” lock washer, 1/4” flat washer, 1/4” t-nut)
4 x	S4	#8 x 3” Wood Screw
2 x	LS1	1/4 x 1-1/2” Lag Screw (1/4” flat washer)

support@cedarsummitplay.com

Step 9: Swing Wall Assembly Part 1

Note: Keep all bolts loose in this step.

A: On the ground lay flat 2 (1931) Posts then attach (2029) Ground SW with 4 (H2) 1/4 x 2” Hex Bolts (with lock washer, flat washer and t-nut); (1895) Floor End using 2 (H2) 1/4 x 2” Hex Bolts (with lock washer, flat washer and t-nut) in the bottom holes; and (2552) SW Side using 2 (H2) 1/4 x 2” Hex Bolts (with lock washer, flat washer and t-nut) as shown in fig. 9.1.

B: Attach 1 (0369) Lower Diagonal to each side of the (2029) Ground SW with 1 (H2) 1/4 x 2” Hex Bolt (with lock washer, flat washer and t-nut) per diagonal. (fig. 9.1)

Fig. 9.1

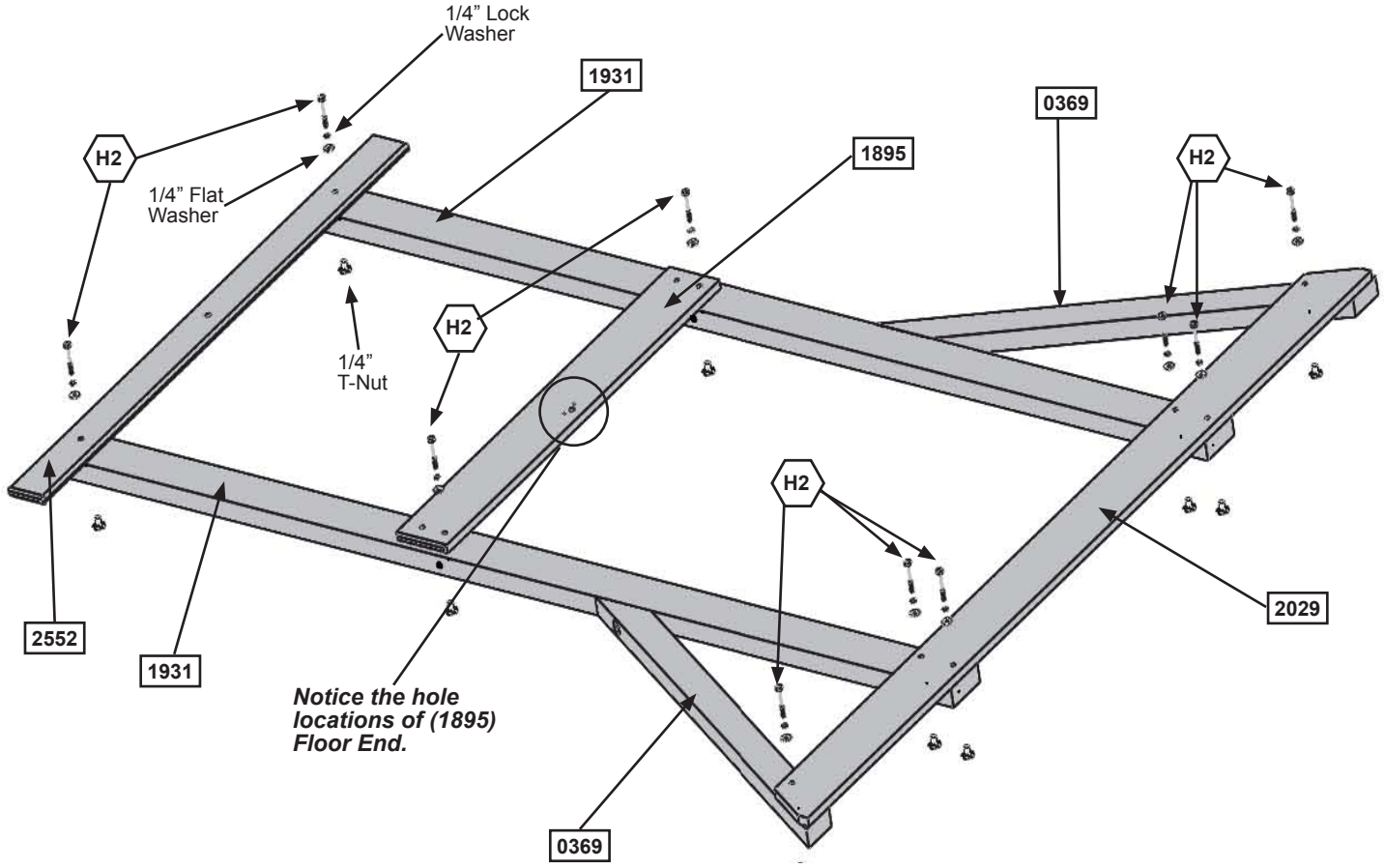

Wood Parts		
2 x	1931	Post 2 x 4 x 81”
2 x	0369	Lower Diagonal 2 x 3 x 37”
1 x	2552	SW Side 1 x 4 x 46-3/4”
1 x	2029	Ground SW 1 x 5 x 72”
1 x	1895	Floor End 1 x 5 x 35-1/4”

Hardware

10 x H2 **1/4 x 2” Hex Bolt (1/4” lock washer, 1/4” flat washer, 1/4” t-nut)**

support@cedarsummitplay.com

Step 9: Swing Wall Assembly Part 2

C: Place (2034) Wall Support on both (1931) Posts as shown in fig. 9.2.

D: Place (2539) SW Mount across (1895) Floor End, (2034) Wall Support and (2552) SW Side. Loosely attach using 3 (G4) 5/16 x 4” Hex Bolts (with lock washer, flat washer and t-nut) as shown in fig. 9.2.

Note: Pre-drill all holes using a 1/8” drill bit before installing the lag screws.

E: Make sure assembly is square and then fasten (1895) Floor End to (1931) Posts in the top holes using 2 (LS1) 1/4 x 1-1/2” Lag Screws (with flat washer); and (0369) Lower Diagonals to (1931) Posts with 1 (LS3) 1/4 x 3” Lag Screw (with flat washer) per diagonal. (fig. 9.2)

F: Make sure (2034) Wall Support is square to the posts then attach to both (1931) Posts using 4 (S2) #8 x 1-1/2” Wood Screws. (fig. 9.2)

G: Tighten all bolts, except for the (2539) SW Mount bolts, from this step.

Fig. 9.2

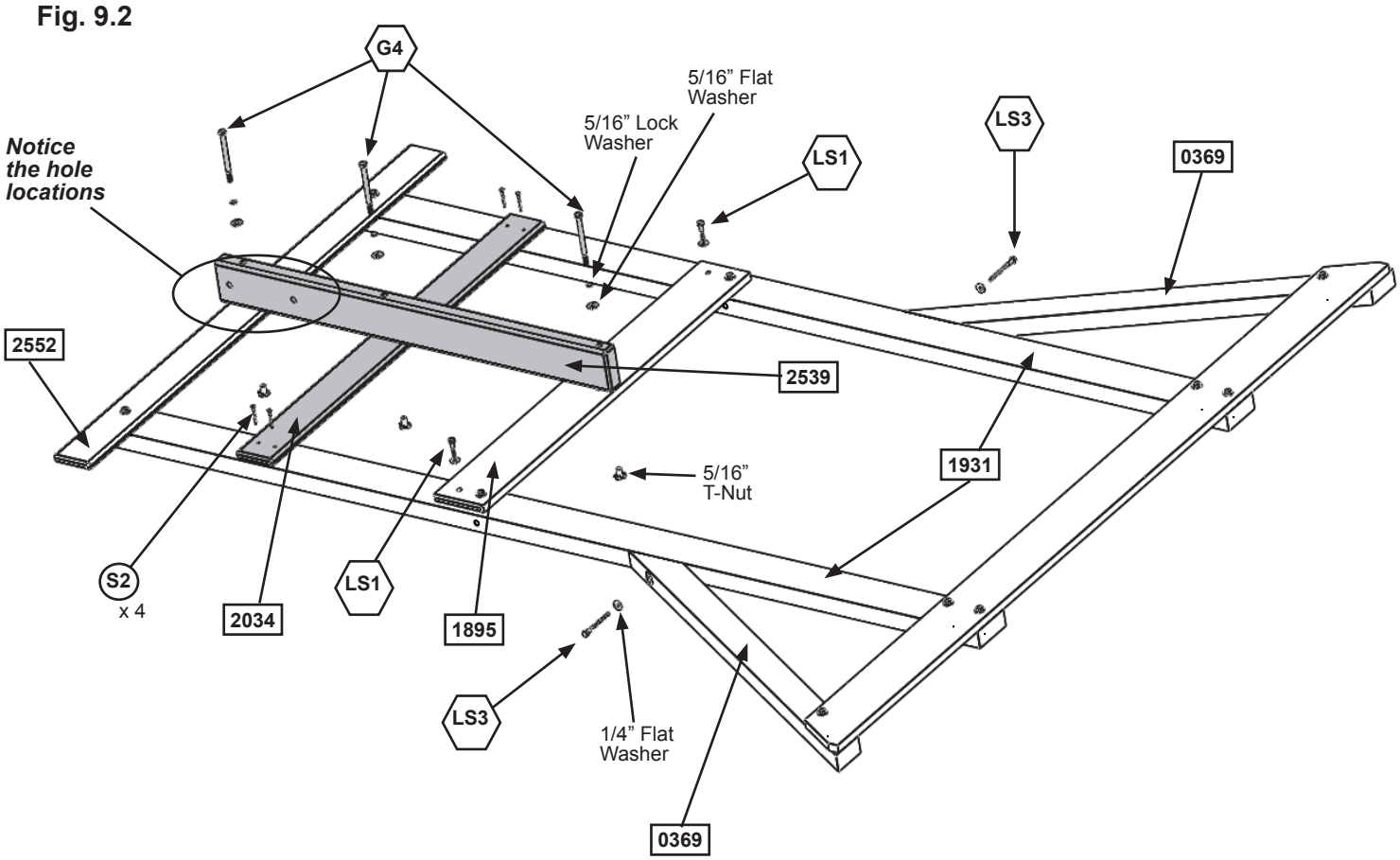

Wood Parts	Hardware
1 x 2034 Wall Support 1 x 4 x 35-7/8”	3 x G4 5/16 x 4” Hex Bolt (5/16” lock washer, 5/16” flat washer, 5/16” t-nut)
1 x 2539 SW Mount 2 x 4 x 36”	2 x LS1 1/4 x 1-1/2” Lag Screw (1/4” flat washer)
	2 x LS3 1/4 x 3” Lag Screw (1/4” flat washer)
	4 x S2 #8 x 1-1/2” Wood Screw

support@cedarsummitplay.com

Step 10: Back Frame Assembly

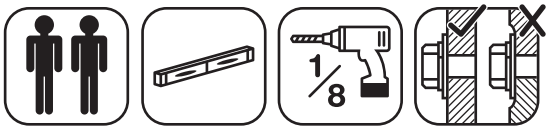

Note: Pre-drill all holes using a 1/8" drill bit before installing the lag screws.

A: On the back of the assembly loosely attach (1768) Lower Back to the bottom of (1931) Posts with 2 (LS3) 1/4 x 3" Lag Screws (with flat washer) in the top (pre-drilled) holes and 2 (S7) #12 x 2" Pan Screws (with 3/16" flat washers) in the bottom holes as shown in fig.10.1.

B: Loosely attach (1894) Back Floor to both (1931) Posts using 2 (H5) 1/4 x 4-1/2" Hex Bolts (with lock washer, flat washer and t-nut). Notice the middle bolt hole is towards the bottom of the board. (fig. 10.1)

C: Attach (2531) MK Mount to (1894) Back Floor with 1 (H13) 1/4 x 3-1/2" Hex Bolt (with lock washer, flat washer and t-nut) and to (2532) Top Front Back with 1 (H12) 1/4 x 3" Hex Bolt (with lock washer, flat washer and t-nut). Notice extended end of (2532) Top Front Back is on the Cafe Wall side. (fig. 10.1)

D: Make sure (2532) Top Front Back is level then attach to both (1931) Posts using 4 (S7) #12 x 2" Pan Screws (with 3/16" flat washers). (fig. 10.1)

E: Tighten all bolts.

Fig. 10.1

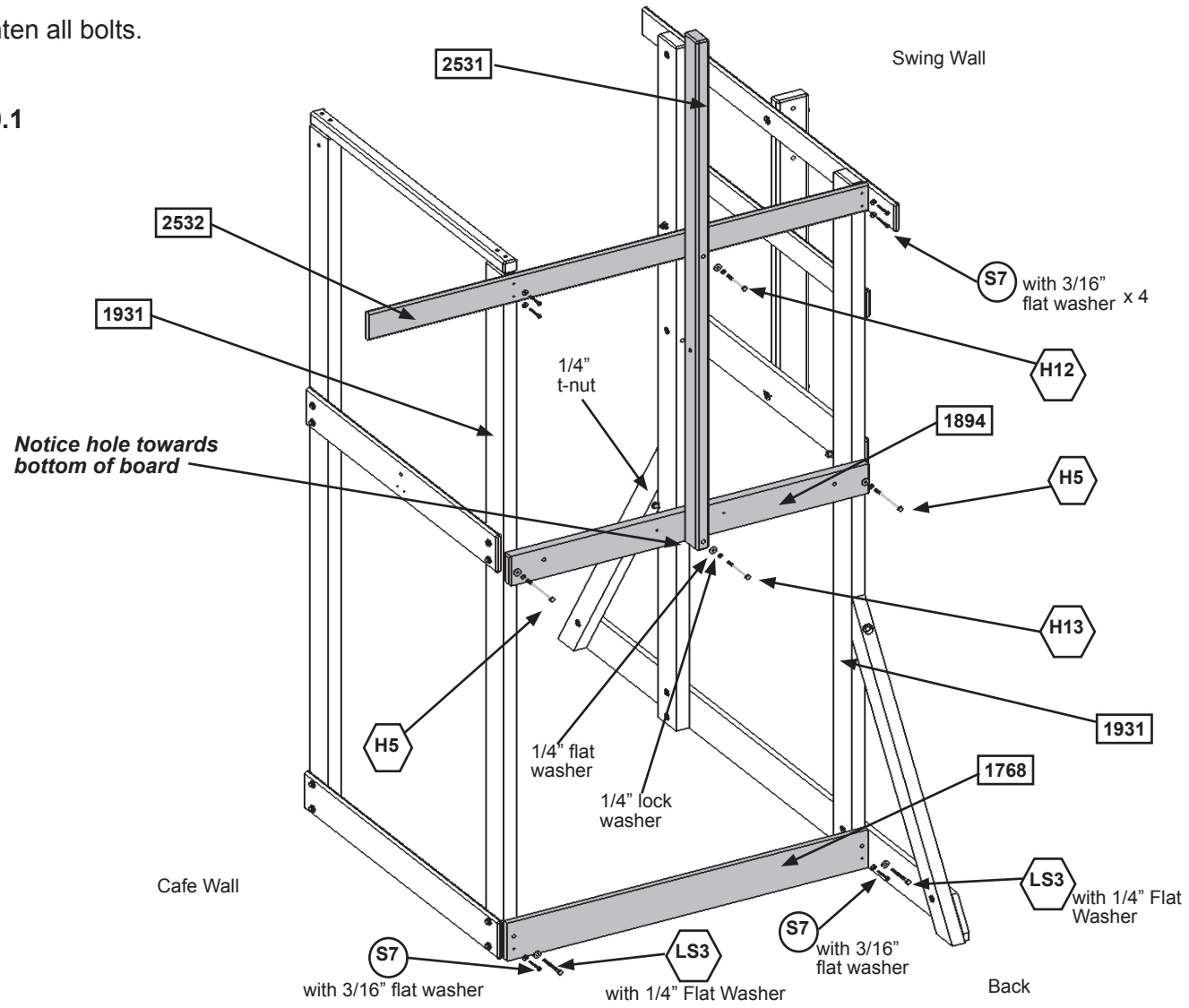

Wood Parts

- 1 x 1768 **Lower Back 1 x 5 x 38-1/2"**
- 1 x 1894 **Back Floor 5/4 x 4 x 38-1/2"**
- 1 x 2531 **MK Mount 2 x 3 x 60-3/8"**
- 1 x 2532 **Top Front Back 1 x 4 x 53-1/4"**

Hardware

- 6 x S7 **#12 x 2" Pan Screw (3/16" flat washer)**
- 1 x H12 **1/4 x 3" Hex Bolt (1/4" lock washer, 1/4" flat washer, 1/4" t-nut)**
- 1 x H13 **1/4 x 3-1/2" Hex Bolt (1/4" lock washer, 1/4" flat washer, 1/4" t-nut)**
- 2 x H5 **1/4 x 4-1/2" Hex Bolt (1/4" lock washer, 1/4" flat washer, 1/4" t-nut)**
- 2 x LS3 **1/4 x 3" Lag Screw (1/4" flat washer)**

support@cedarsummitplay.com

Step 11: Front Frame Assembly Part 1

A: On the front of the assembly place (1908) Front Floor on the inside of each (1931) Post and loosely attach with 2 (H6) 1/4 x 4-3/4” Hex Bolts (with lock washer, flat washer and t-nut) as shown in fig. 11.1.

Note: Pre-drill all holes using a 1/8” drill bit before installing the lag screws.

B: Attach (1768) Lower Back to the bottom of (1931) Posts with 2 (LS3) 1/4 x 3” Lag Screws (with flat washer) in the top (pre-drilled) holes and 2 (S7) #12 x 2” Pan Screws (with 3/16” flat washers) in the bottom holes as shown in fig. 11.1.

Fig. 11.1

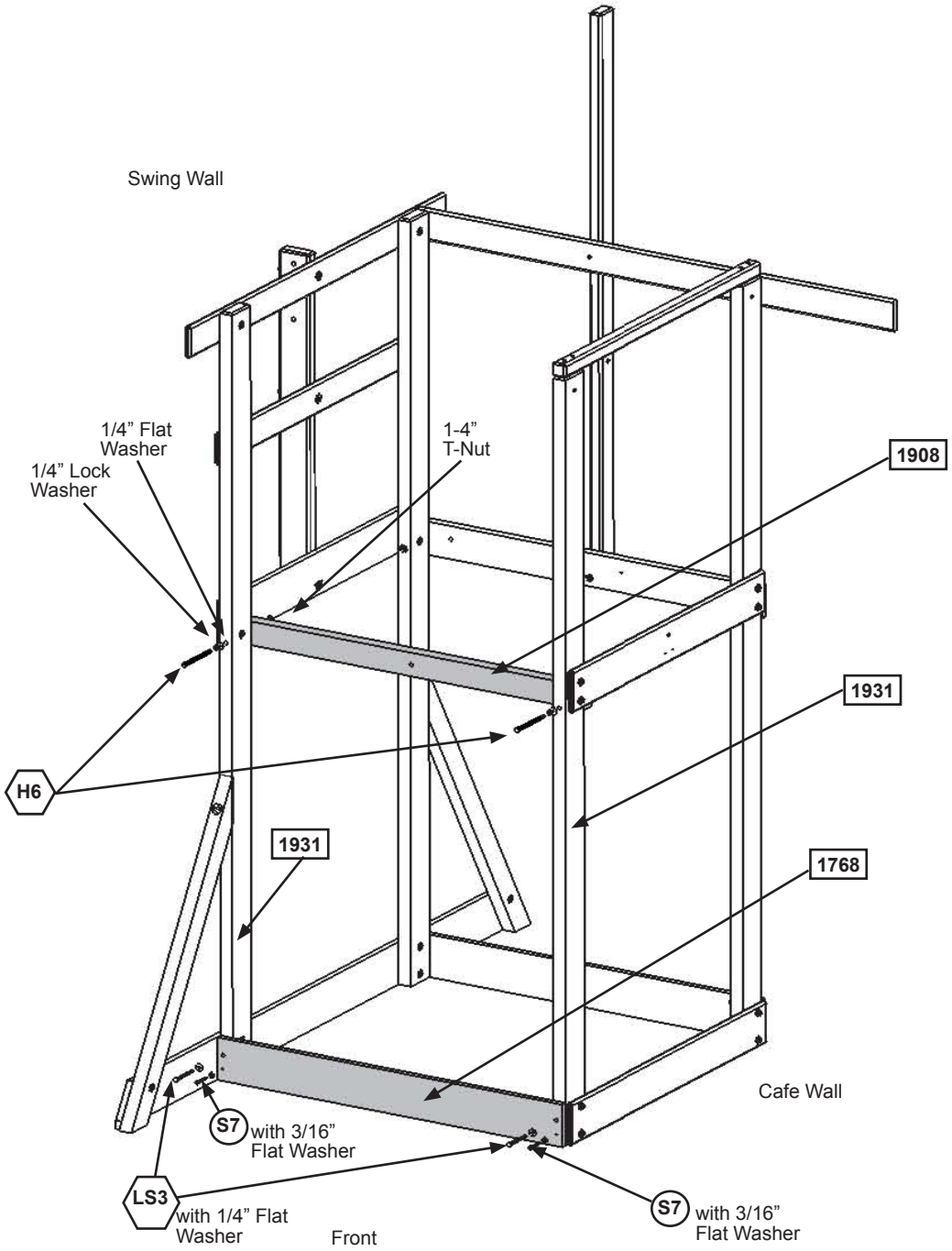

Wood Parts	Hardware
1 x 1908 Front Floor 2 x 3 x 38-1/2”	2 x H6 1/4 x 4-3/4” Hex Bolt (1/4” lock washer, 1/4” flat washer, 1/4” t-nut)
1 x 1768 Lower Back 1 x 5 x 38-1/2”	2 x LS3 1/4 x 3” Lag Screw (1/4” flat washer)
	2 x S7 #12 x 2” Pan Screw (3/16” flat washer)

support@cedarsummitplay.com

Step 11: Front Frame Assembly Part 2

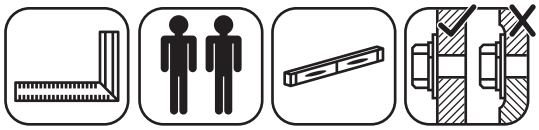

C: Flush to the bottom of (1908) Front Floor loosely attach (2542) Roof Upright with 1 (H12) 1/4 x 3” Hex Bolt (with lock washer, flat washer and t-nut). (fig. 11.2)

D: Loosely attach (2542) Roof Upright to (2037) Front Top and (2532) Top Front Back using 1 (H2) 1/4 x 2” Hex Bolt (with lock washer, flat washer and t-nut) per board. (fig. 11.2)

E: Make sure (2037) Front Top and (2532) Top Front Back are square and level and then attach (2532) Top Front Back to (1931) Posts using 4 (S7) #12 x 2” Pan Screws (with 3/16” flat washers) and (2037) Front Top to (1931) Posts with 2 (S7) #12 x 2” Pan Screws (with 3/16” flat washers) in the top holes and 2 (S2) #8 x 1-1/2” Wood Screws in the bottom holes. (fig. 11.3)

F: Tighten all bolts.

Fig. 11.2

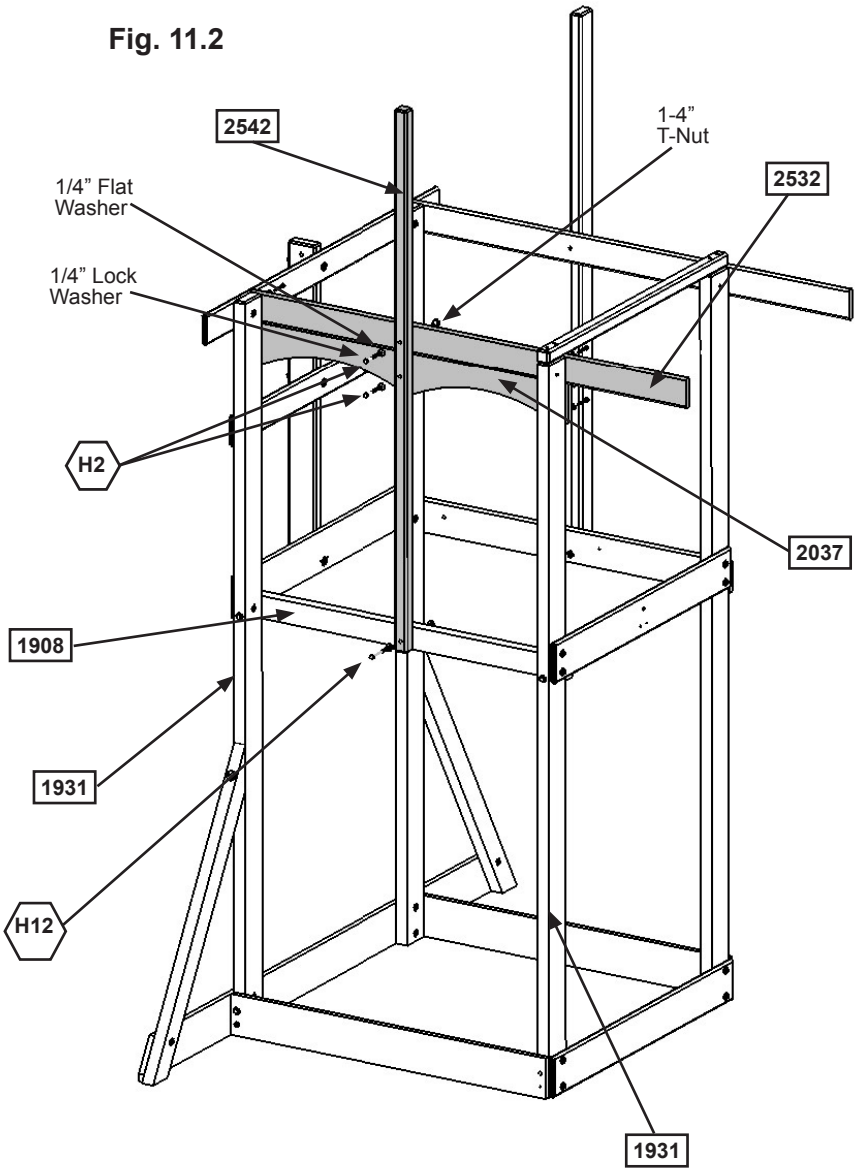

Fig. 11.3

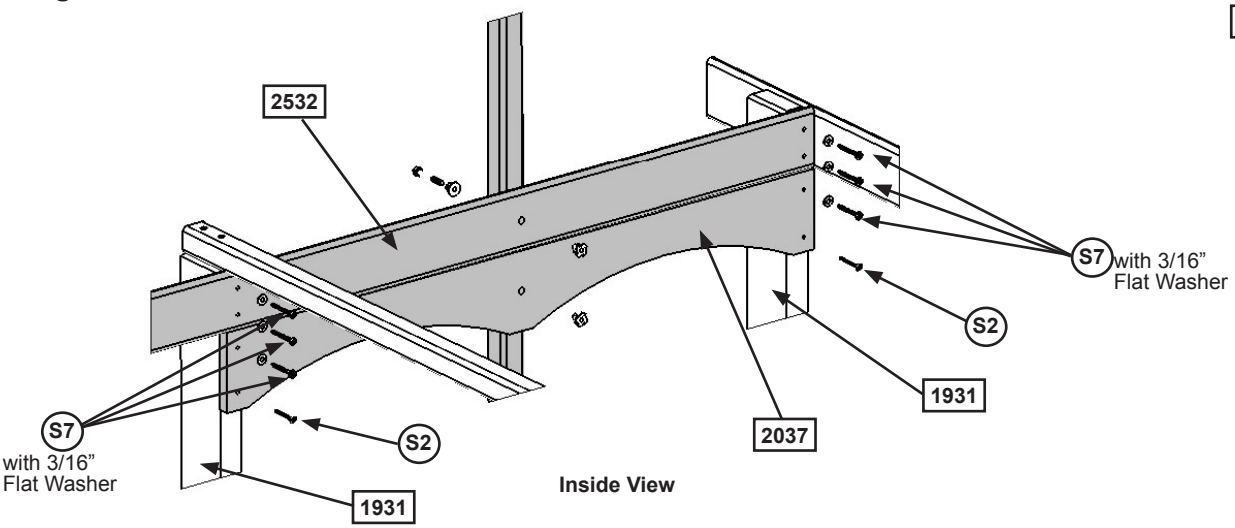

Wood Parts	Hardware
1 x 2037 Front Top 1 x 5 x 38-1/2”	2 x H2 1/4 x 2” Hex Bolt (1/4” lock washer, 1/4” flat washer, 1/4” t-nut)
1 x 2542 Roof Upright 2 x 2 x 60”	1 x H12 1/4 x 3” Hex Bolt (1/4” lock washer, 1/4” flat washer, 1/4” t-nut)
1 x 2532 Top Front Back 1 x 4 x 53-1/4”	6 x S7 #12 x 2” Pan Screw (3/16” flat washer)
	2 x S2 #8 x 1-1/2” Wood Screw

support@cedarsummitplay.com

Step 12: Attach Gusset to Front Frame Assembly

A: Make sure the assembly is square before proceeding.

B: From the inside of the assembly, attach (0312) Gusset flush to the outside edge of (1931) Post on the Swing Wall using 2 (S3) #8 x 2-1/2" Wood Screws. The other end of the gusset should be tight against (1908) Front Floor. (fig. 12.1 and 12.2)

C: Attach the other end of (0312) Gusset to (1908) Front Floor with 2 (S3) #8 x 2-1/2" Wood Screws as shown in fig. 12.2.

Fig. 12.1

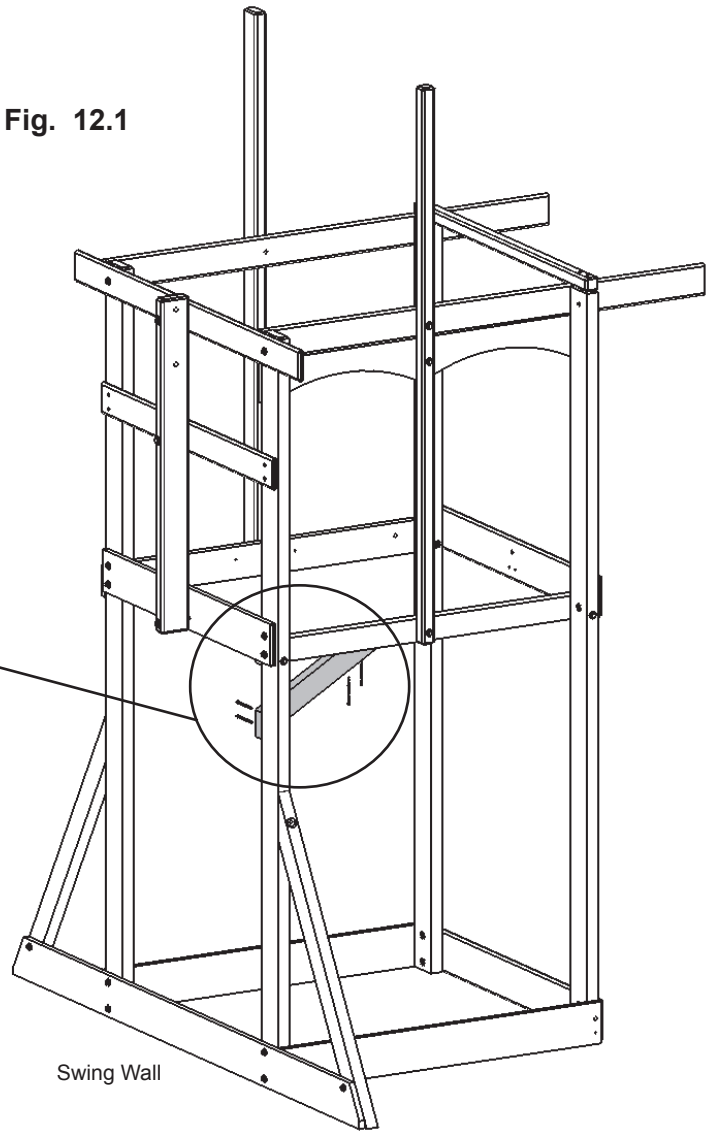

Fig. 12.2

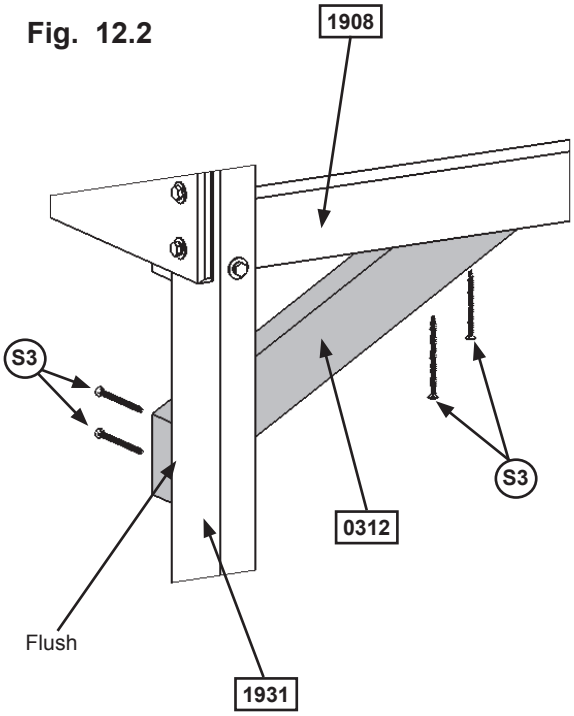

Wood Parts

1x 0312 Gusset 2 x 3 x 16"

Hardware

4 x S3 #8 x 2-1/2" Wood Screw

support@cedarsummitplay.com

Step 13: Floor Frame Assembly

A: Loosen the top bolt and remove the middle and bottom bolts in (2539) SW Mount. Do not discard these bolts, you will re-install them after the (1903) Floor Joist is attached. (fig. 13.1)

B: From inside the assembly, measure 2-3/4" down from the top of (1895) Floor End and (2032) End Floor then attach (1903) Floor Joist to each board using the pilot holes as a guide with 2 (S4) #8 x 3" Wood Screws per end. (fig. 13.2 and 13.3)

C: Re-install the bolts in (2539) SW Mount and tighten all three bolts. (fig. 13.1)

D: On the Back Wall attach (1761) Side Joist to the inside of (1894) Back Floor with 2 (H3) 1/4 x 2-1/2" Hex Bolts (with lock washer, flat washer and t-nut) in the outside holes and 2 (S7) #12 x 2" Pan Screws in the inside holes as shown in fig. 13.3.

Fig. 13.1

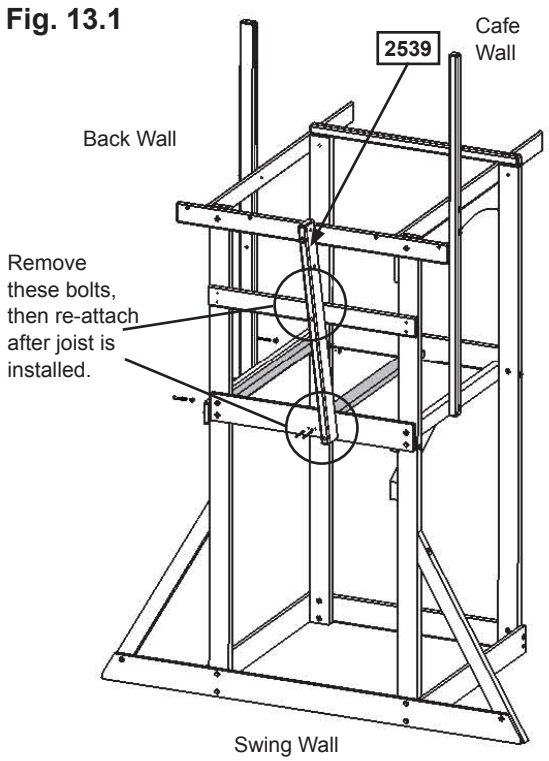

Fig. 13.2

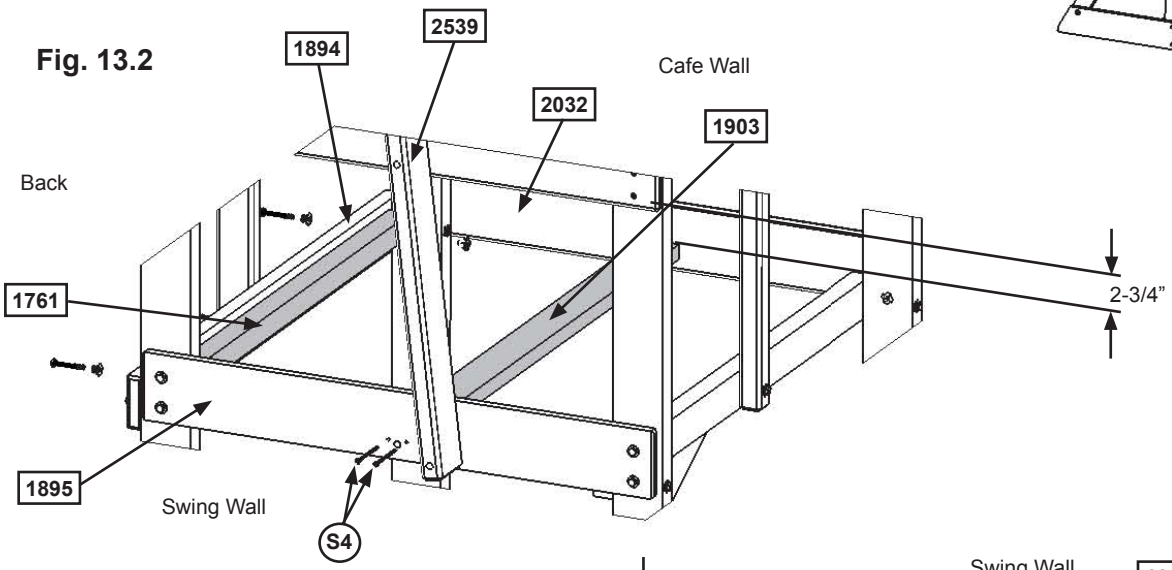

Fig. 13.3

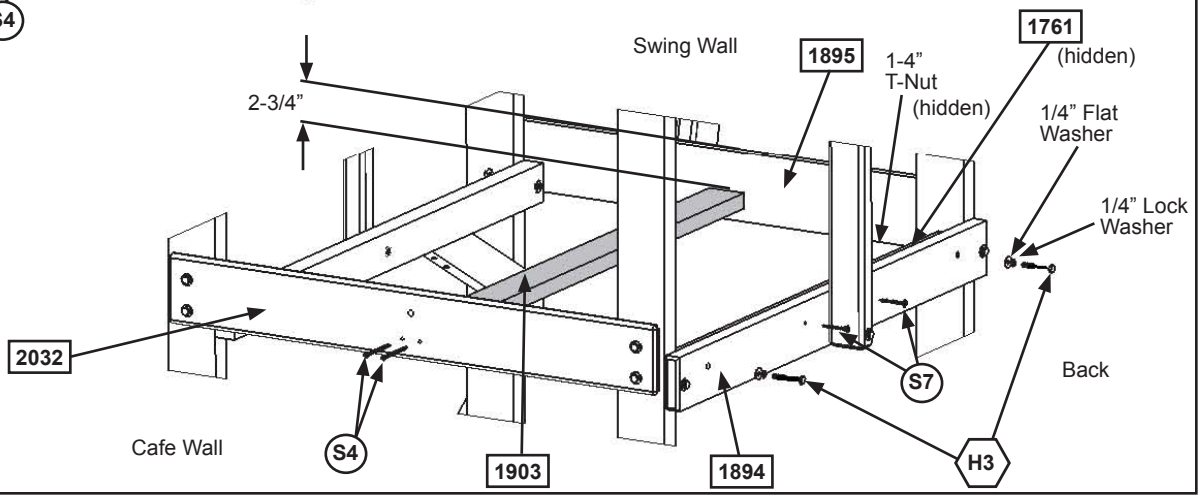

Wood Parts

1 x 1903 **Floor Joist 5/4 x 3 x 38-1/2"**

1 x 1761 **Side Joist 2 x 2 x 34-3/4"**

Hardware

2 x H3 **1/4 x 2-1/2" Hex Bolt (1/4" lock washer, 1/4" flat washer, 1/4" t-nut)**

4 x S4 **#8 x 3" Wood Screw**

2 x S7 **#12 x 2" Pan Screw**

Step 14: Attach Gap and Floor Boards Part 1

A: Install 1 (1890) CE Gap Board tight to each end of the assembly attaching to (1761) Side Joist, (1903) Floor Joist and (1908) Front Floor using 5 (S2) #8 x 1-1/2" Wood Screws per board. (fig. 14.1)

Fig. 14.1

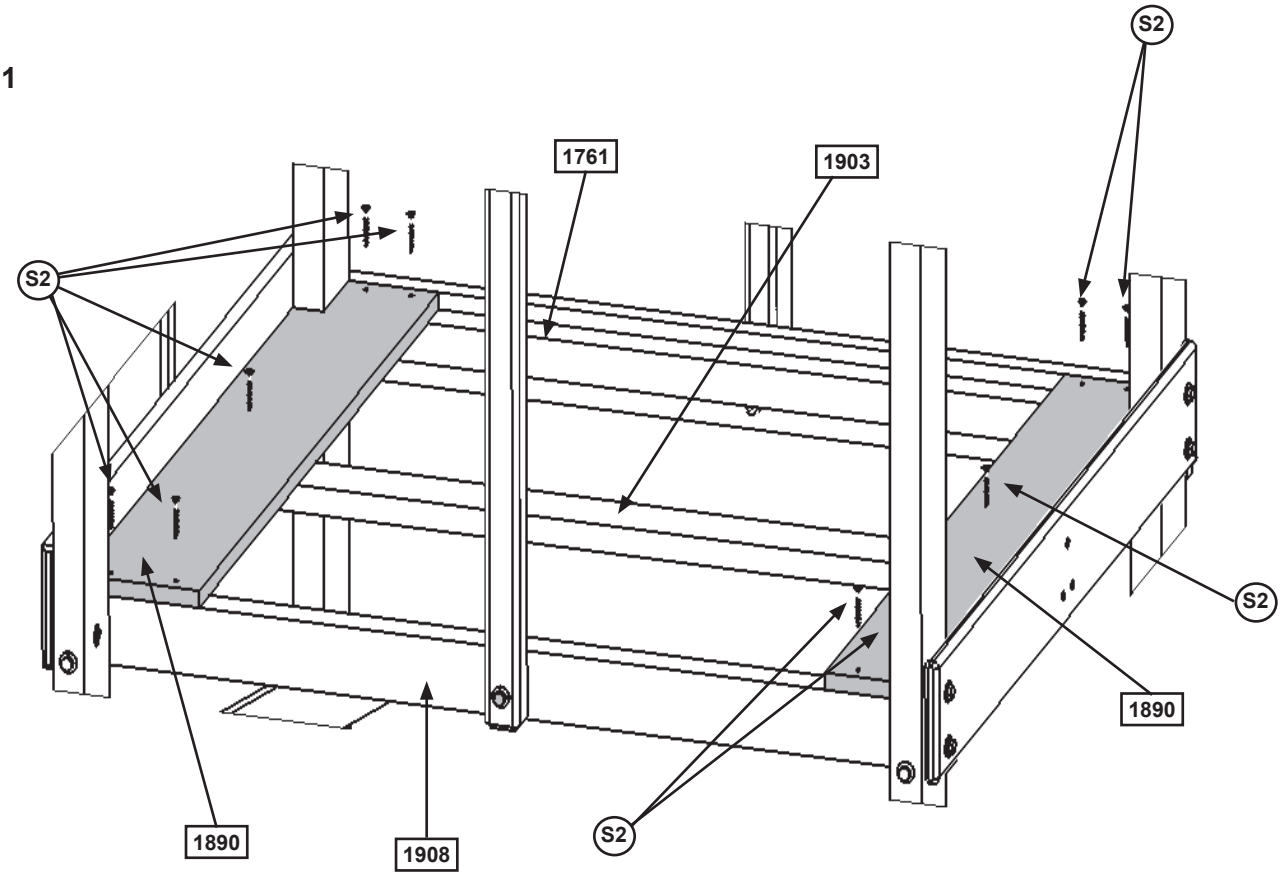

Wood Parts	Hardware
2 x 1890 CE Gap Board 1 x 6 x 32-1/2"	10 x S2 #8 x 1-1/2" Wood Screw

Step 14: Attach Gap and Floor Boards Part 2

B: In between both (1890) CE Gap Boards place 5 (1889) Floor Boards making sure all boards are evenly spaced. Attach to (1761) Side Joist, (1903) Floor Joist and (1908) Front Floor using 5 (S2) #8 x 1-1/2" Wood Screws per board. (fig. 14.2)

Fig. 14.2

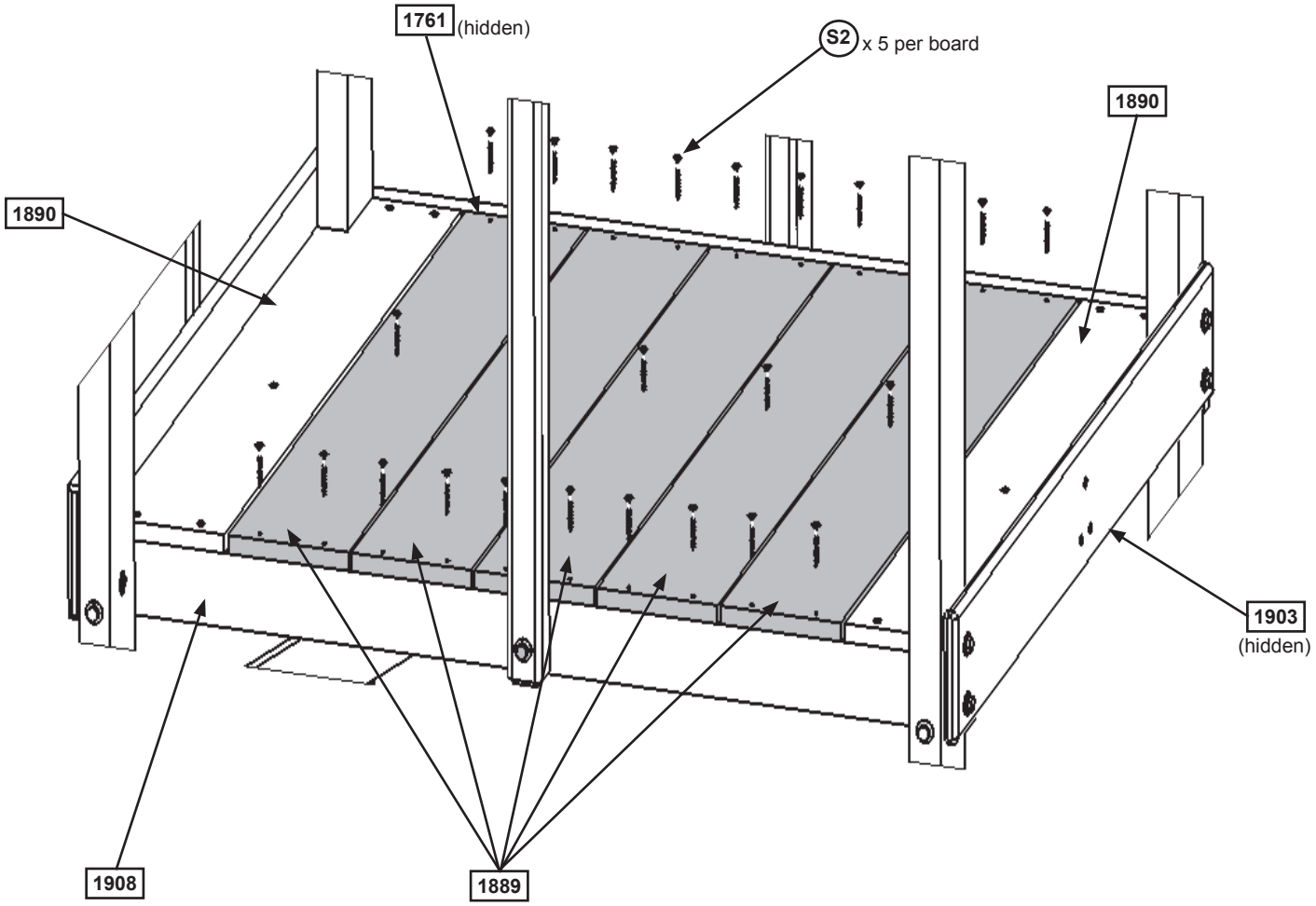

Wood Parts	Hardware
5 x 1889 Floor Board 1 x 6 x 32-1/2"	25 x S2 #8 x 1-1/2" Wood Screw

support@cedarsummitplay.com

Step 15: Attach Ground Stakes

MOVE FORT TO FINAL LOCATION. FINAL LOCATION MUST BE LEVEL GROUND

Warning! To prevent tipping and avoid potential injury, stakes must be driven 10-1/2" into ground. Digging or driving stakes can be dangerous if you do not check first for underground wiring, cables or gas lines.

A: Drive 3 (0318) Ground Stakes 10-1/2" into the ground at 1 (1931) Post and 2 (0369) Lower Diagonals as shown in fig. 15.1. Attach using 2 (S3) #8 x 2-1/2" Wood Screws per ground stake. (fig. 15.2)

Fig. 15.1

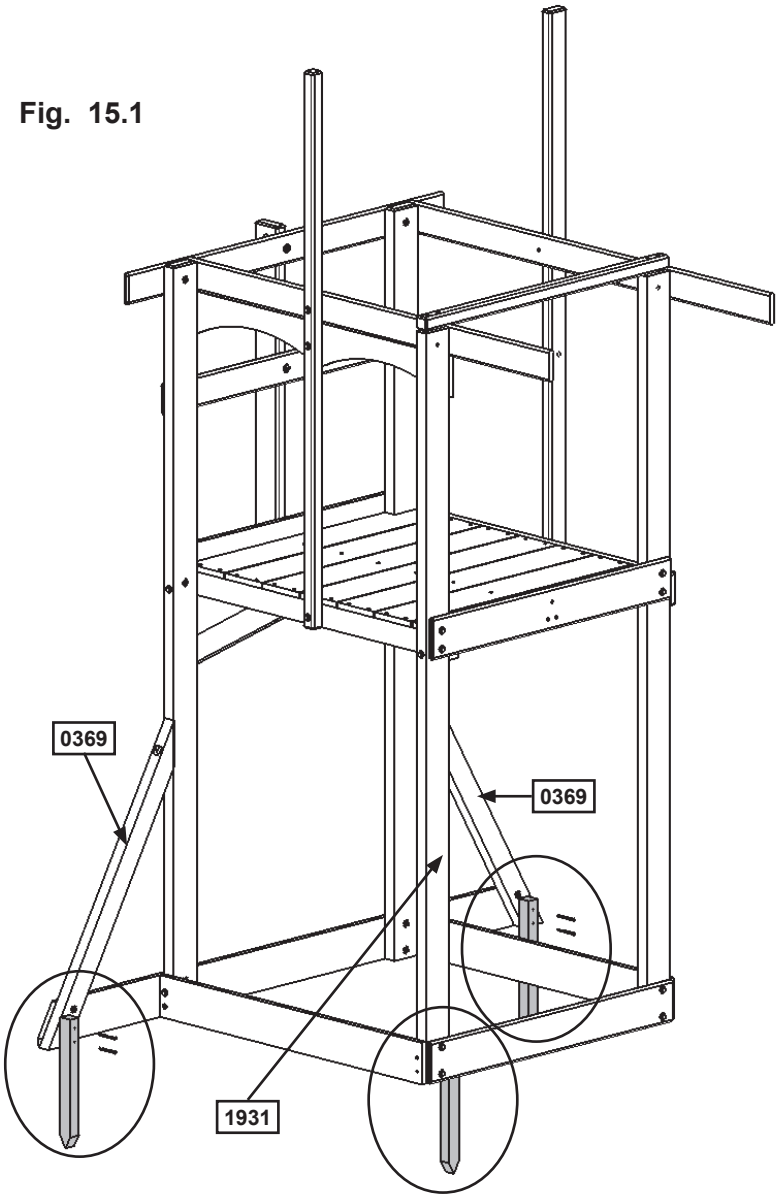

Fig. 15.2

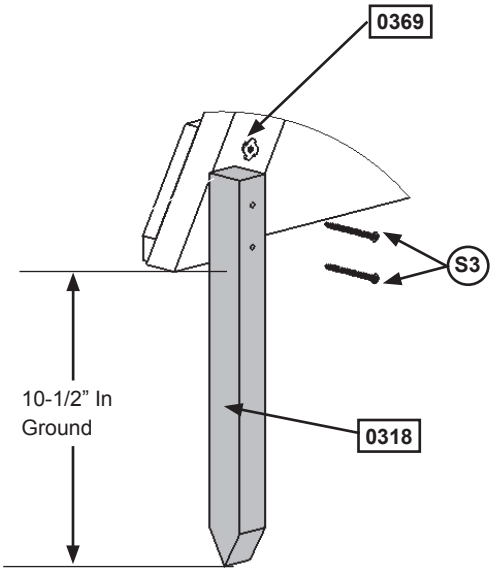

Wood Parts

3 x 0318 Ground Stakes 1-1/4 x 1-1/2 x 14"

Hardware

6 x S3 #8 x 2-1/2" Wood Screw

support@cedarsummitplay.com

Step 16: Attach Rock Wall to Fort

Note: Pre-drill all holes using a 1/8" drill bit before installing the wood screws.

A: Place Rock Wall Assembly from Step 2 centred on and flush to top of (1908) Front Floor (fig. 16.1 and 16.3). Attach (0349) Rock Rails to (1908) Front Floor using 4 (S15) #8 x 1-3/4" Wood Screws as shown in fig. 16.2.

B: Attach (1779) CE Access Board to top of Rock Wall Assembly, flush to top of (0349) Rock Rails using 4 (S2) #8 x 1-1/2" Wood Screws. (fig. 16.2)

Fig. 16.2

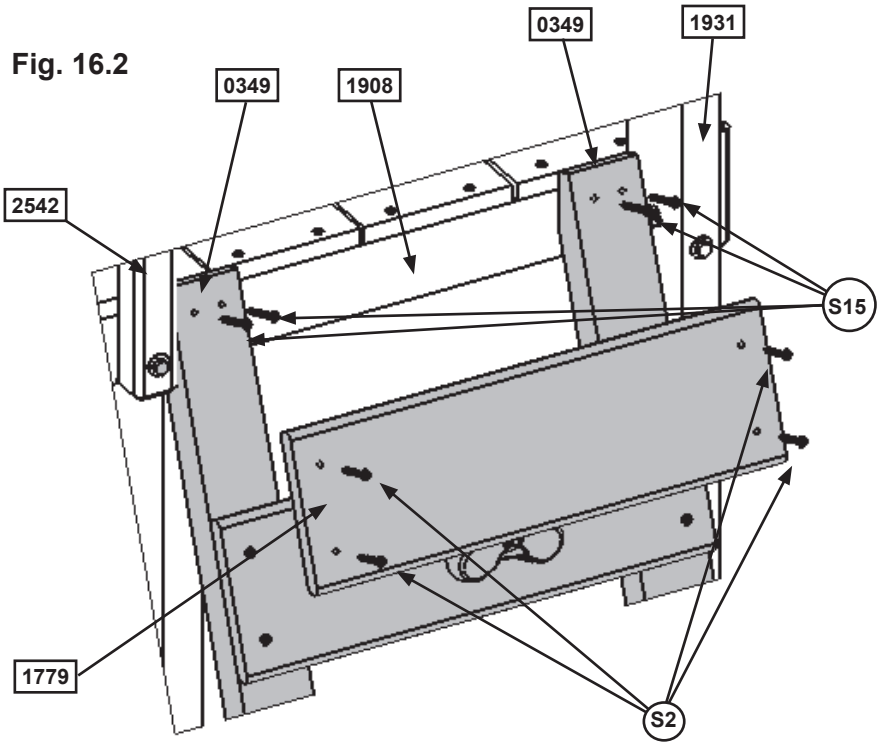

Fig. 16.1

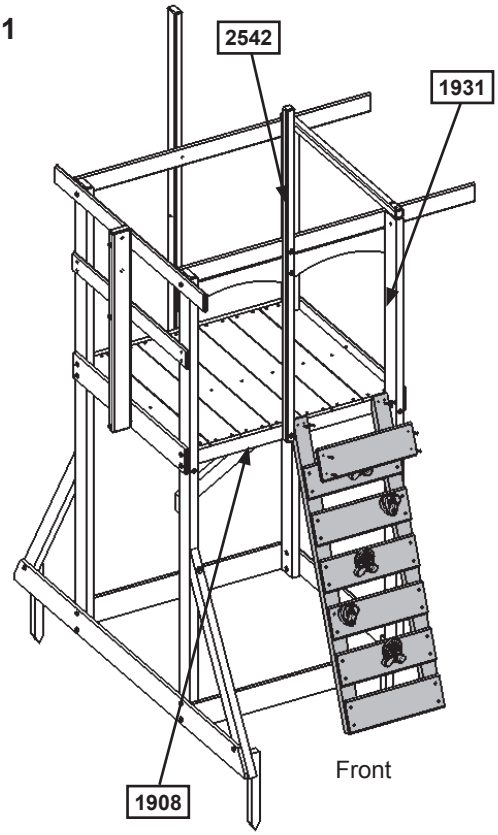

Fig. 16.3

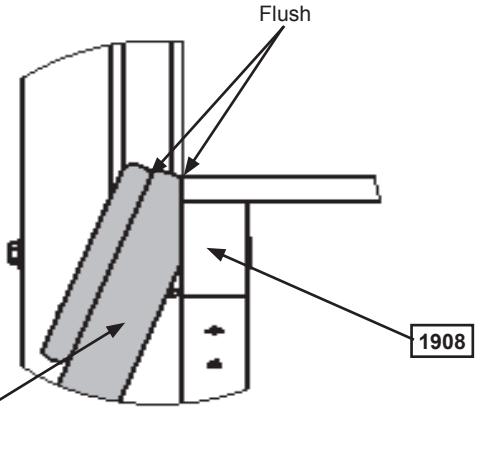

Wood Parts	Hardware
1 x 1779 CE Access Board 1 x 6 x 17"	4 x S15 #8 x 1-3/4" Wood Screw
	4 x S2 #8 x 1-1/2" Wood Screw

Step 17: Attach Slide to Fort

Note: Pre-drill all holes using a 1/8" drill bit before installing the pan screws.

A: Place Slide in the centre between (2542) Roof Upright and (1931) Post. (fig. 17.1 and 17.2)

B: Attach slide to fort through the floor boards and into (1908) Front Floor using 3 (S7) #12 x 2" Pan Screws. (fig. 17.1 and 17.2)

Fig. 17.1

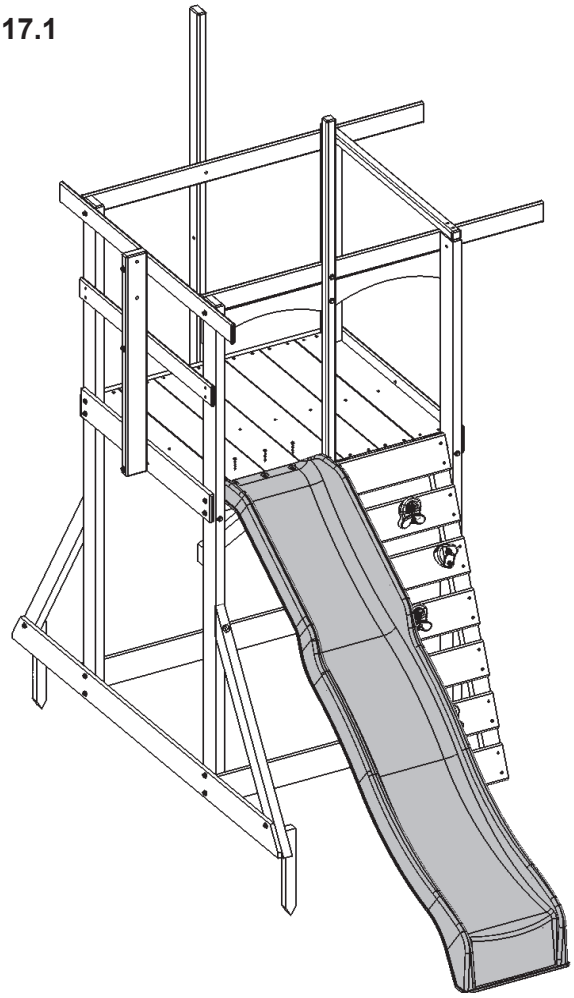

Centre Slide In Opening

Fig. 17.2

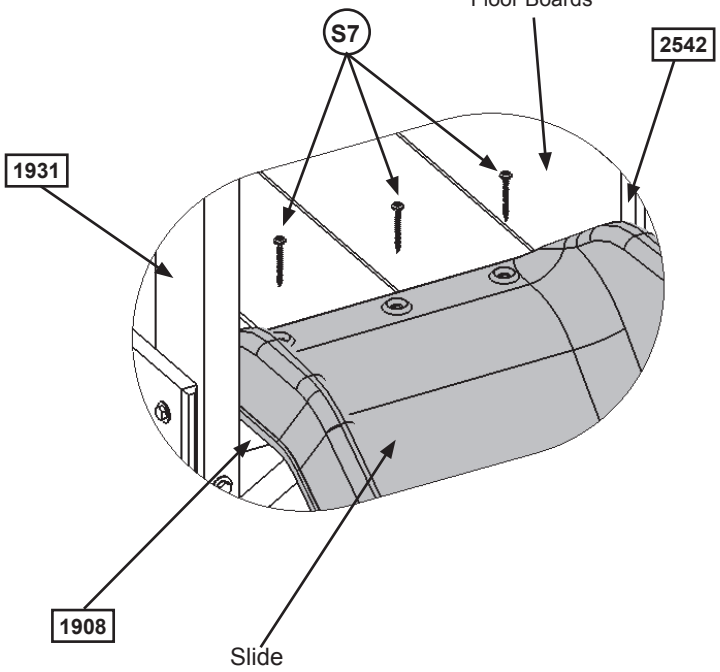

Hardware	Other Parts
3 x (S7) #12 x 2" Pan Screw	1 x Slide

support@cedarsummitplay.com

Step 18: Lower Cafe Wall Assembly Part 1

A: Tight to the top of (2538) Ground Cafe and flush to the outside edges of both (1931) Posts attach 4 (2545) CE Siding using 2 (S0) #8 x 7/8" Truss Screws per board. (fig. 18.1 and 18.2)

B: Tight to the top of (2545) CE Siding attach (2533) Kitchen Wall Support flush to the outside edge of each (1931) Post using 2 (S2) #8 x 1-1/2" Wood Screws per post. (fig. 18.1 and 18.2)

Fig. 18.1

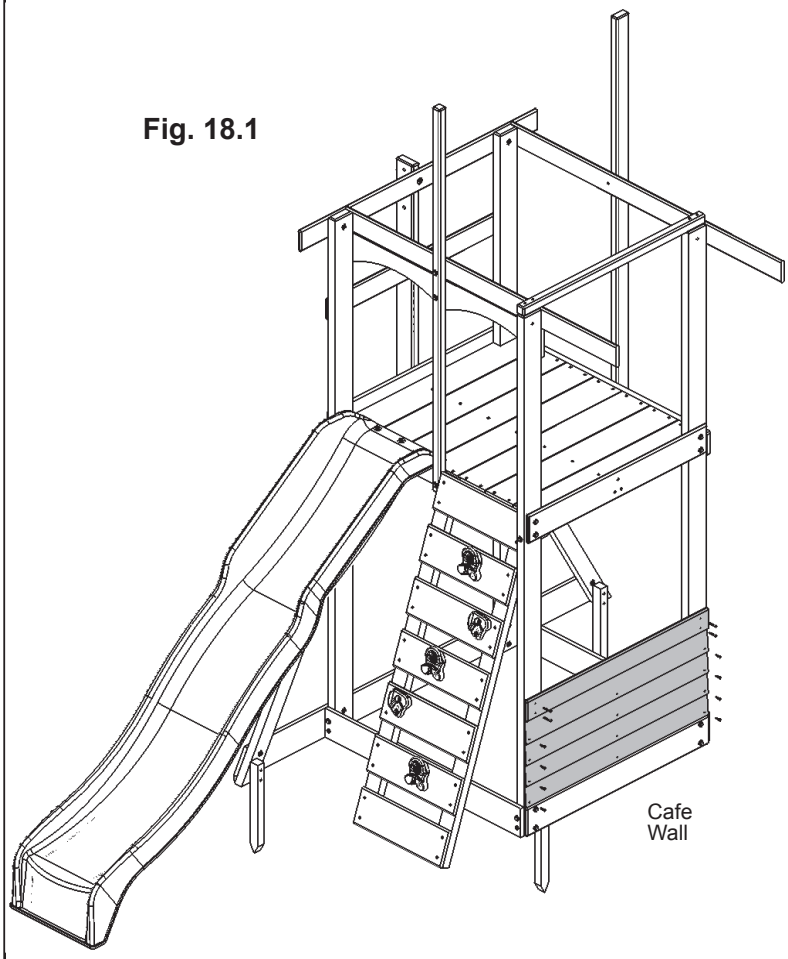

Fig. 18.2

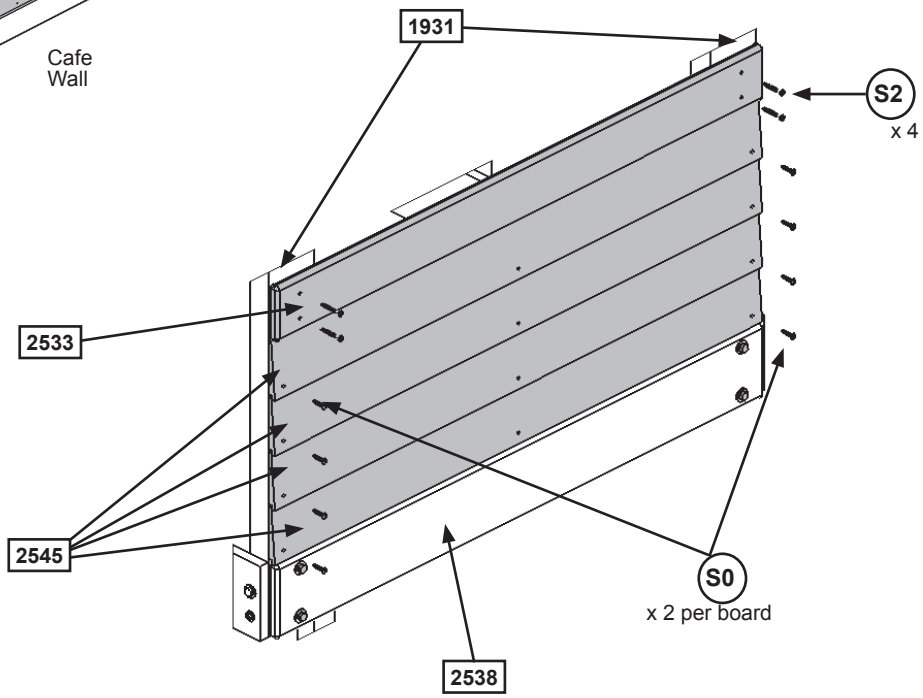

Wood Parts		Hardware	
1 x 2533	Kitchen Wall Support 1 x 4 x 35-7/8"	8 x S0	#8 x 7/8" Truss Screw
4 x 2545	CE Siding 3/8 x 3-1/2 x 35-7/8"	4 x S2	#8 x 1-1/2" Wood Screw

support@cedarsummitplay.com

Step 18: Lower Cafe Wall Assembly Part 2

C: From inside the assembly flush to the bottom of (2538) Ground Cafe and centred over the pilot holes attach (1227) CE Wall Board to (2533) Kitchen Wall Support and (2538) Ground Cafe using 4 (S1) #8 x 1-1/8" Wood Screws. (fig. 18.3 and 18.4)

D: From outside the assembly attach (2545) CE Siding to (1227) CE Wall Board using 4 (S0) #8 x 7/8" Truss Screws. (fig. 18.3 and 18.5)

Fig. 18.4
Inside View

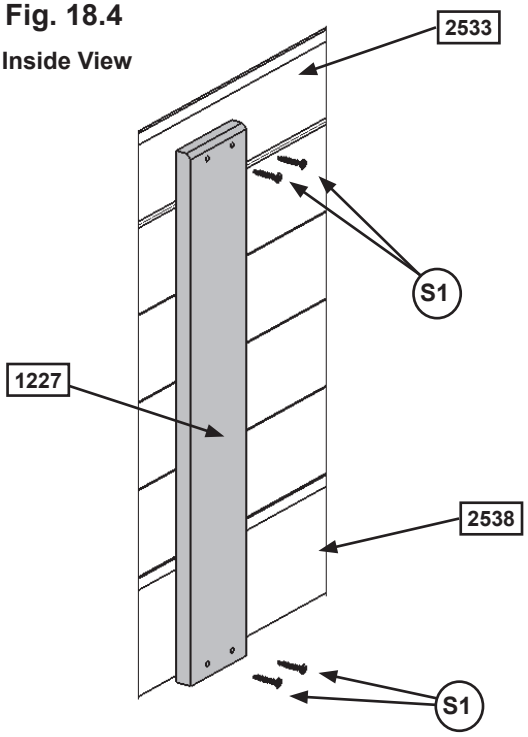

Fig. 18.3

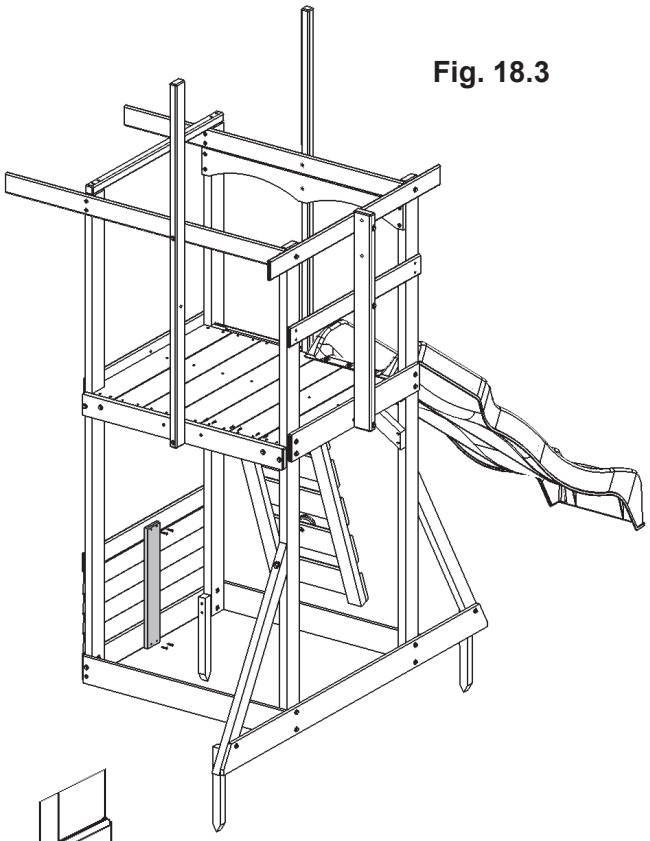

Fig. 18.5
Outside View

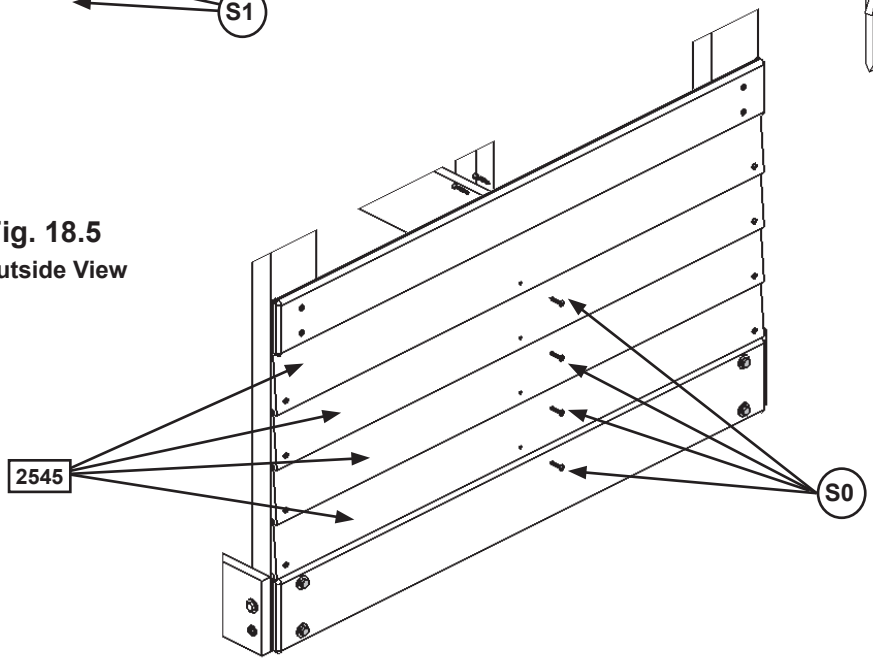

Wood Parts	Hardware
1 x 1227 CE Wall Board 1 x 4 x 20"	4 x S0 #8 x 7/8" Truss Screw
	4 x S1 #8 x 1-1/8" Wood Screw

support@cedarsummitplay.com

Step 19: Attach Cafe Table to Fort Part 1

Note: Pre-drill all holes using a 1/8" drill bit before installing the lag screws.

A: Place Cafe Table from Step 7 in between (1931) Posts and tight to the top of (2533) Kitchen Wall Support with (2547) Table Top on the outside and towards the bottom and the pilot holes towards the top of the assemby as shown in fig. 19.1 and 19.2.

B: Attach (2546) Table Supports to (1931) Posts with 2 (LS3) 1/4 x 3" Lag Screws (with flat washer) per board. (fig. 19.1 and 19.2)

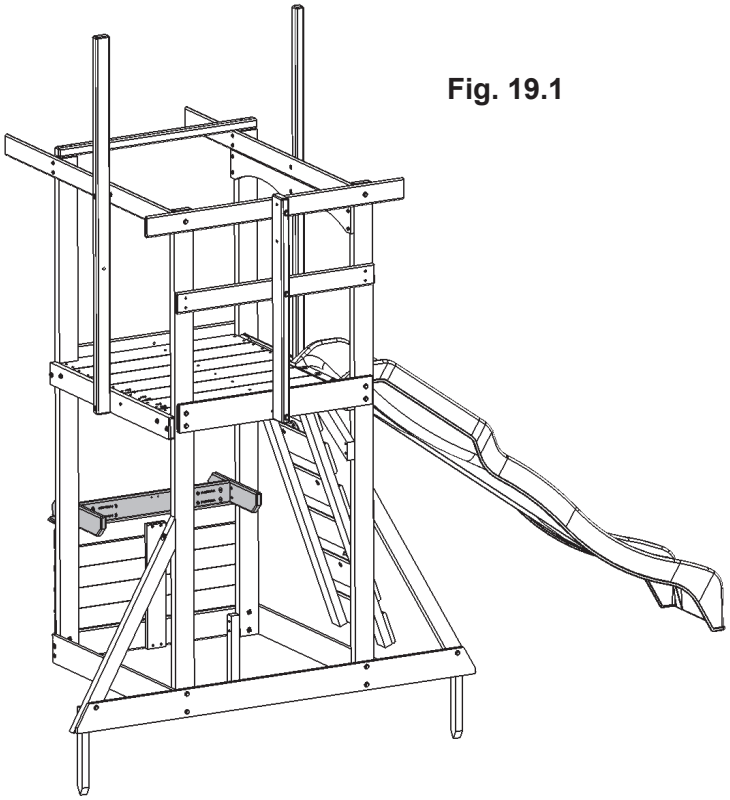

Fig. 19.1

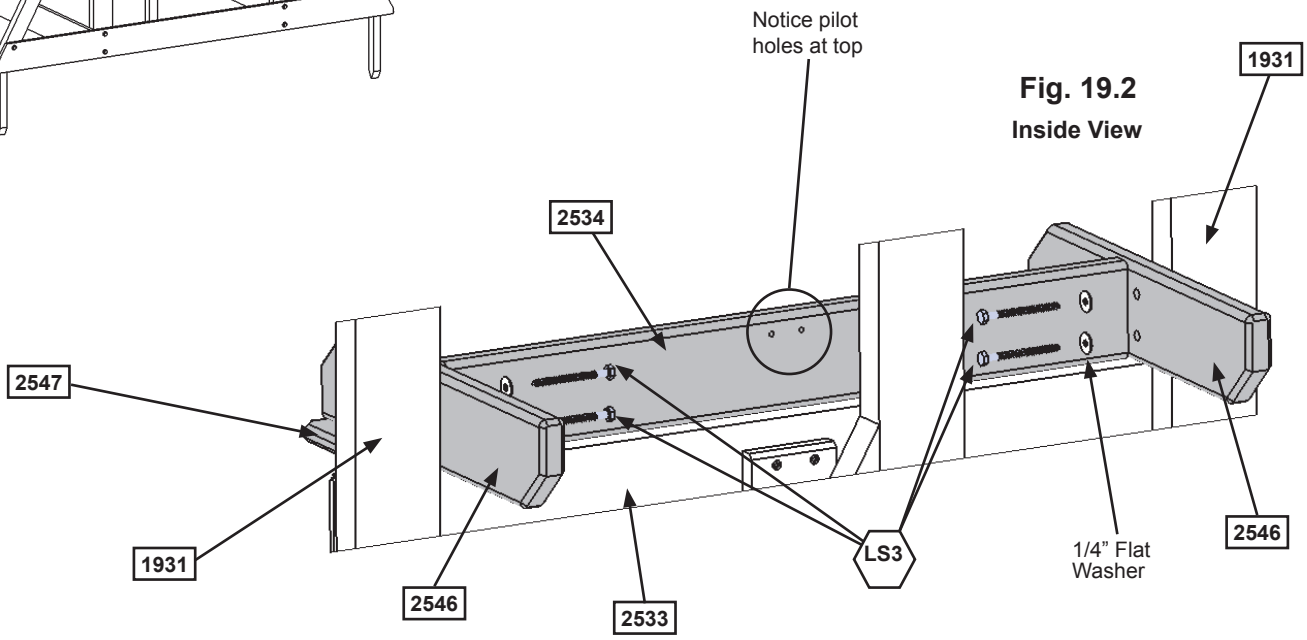

Fig. 19.2
Inside View

Hardware

4 x LS3 1/4 x 3" Lag Screw (1/4" flat washer)

Step 19: Attach Cafe Table to Fort Part 2

C: Place 1 (2548) Gusset tight to the bottom and flush to the outside edge of each (1931) Post. Each gusset should be tight to (2533) Kitchen Wall Support. (fig. 19.3 and 19.4)

D: Attach each (2548) Gusset to each (1931) Post with 2 (S15) #8 x 1-3/4" Wood Screws per board and to each (2546) Table Support with 1 (S3) #8 x 2-1/2" Wood Screw and 1 (S2) #8 x 1-1/2" Wood Screw per board. (fig. 19.3 and 19.4)

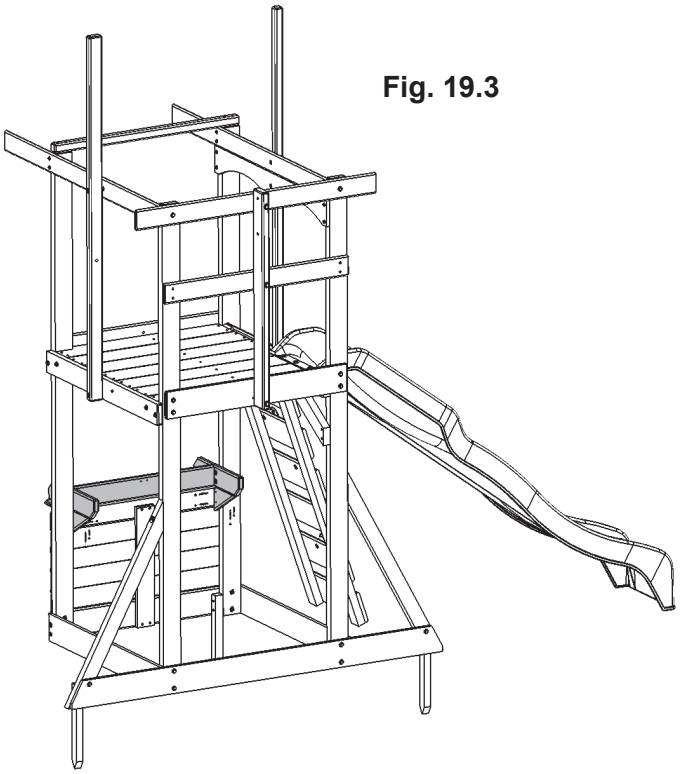

Fig. 19.3

Fig. 19.4

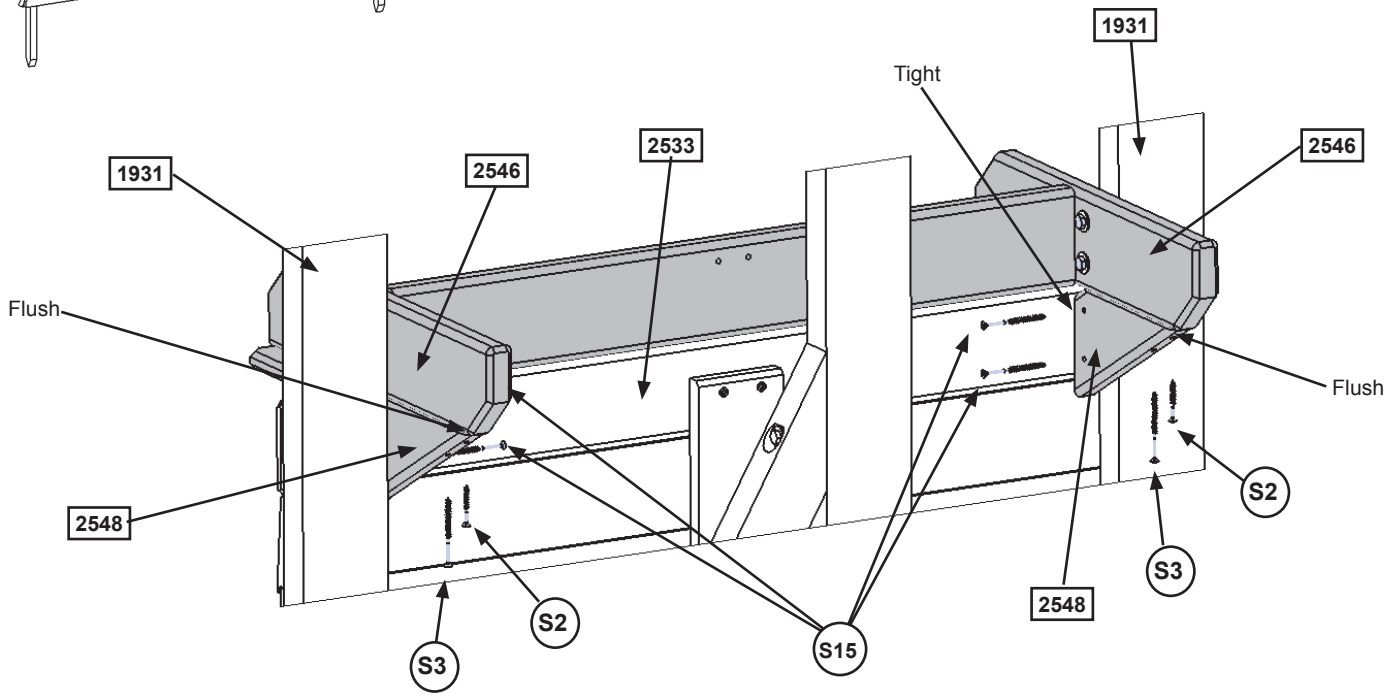

Wood Parts	Hardware
2 x 2548 Gusset 5/4 x 4 x 8"	2 x S2 #8 x 1-1/2" Wood Screw
	2 x S3 #8 x 2-1/2" Wood Screw
	4 x S15 #8 x 1-3/4" Wood Screw

support@cedarsummitplay.com

Step 20: Cafe Table Kitchen Assembly Part 1

A: Attach 1 (2550) Counter Top flush to the front and outside edges of each (2546) Table Support and attach with 2 (TS) #6 x 30 mm Trim Screws. (fig. 20.1 and 20.2)

B: Tight to (2550) Counter Top and flush to the outside edges of the (2546) Table Supports attach 1 (6836) Counter Side to each (2546) Table Support with 3 (TS) #6 x 30 mm Trim Screws per board. (fig. 20.2)

C: Tight to each (6836) Counter Side and flush to the outside edges of the (2546) Table Supports attach 1 (2550) Counter Top to (2534) Back Board with 3 (TS) #6 x 30 mm Trim Screws. (fig. 20.2)

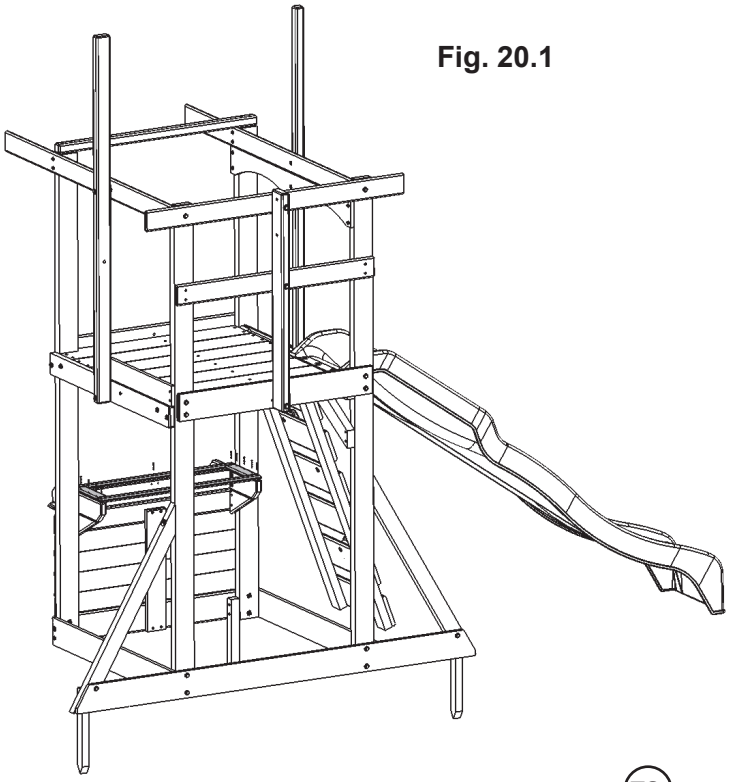

Fig. 20.1

Fig. 20.2

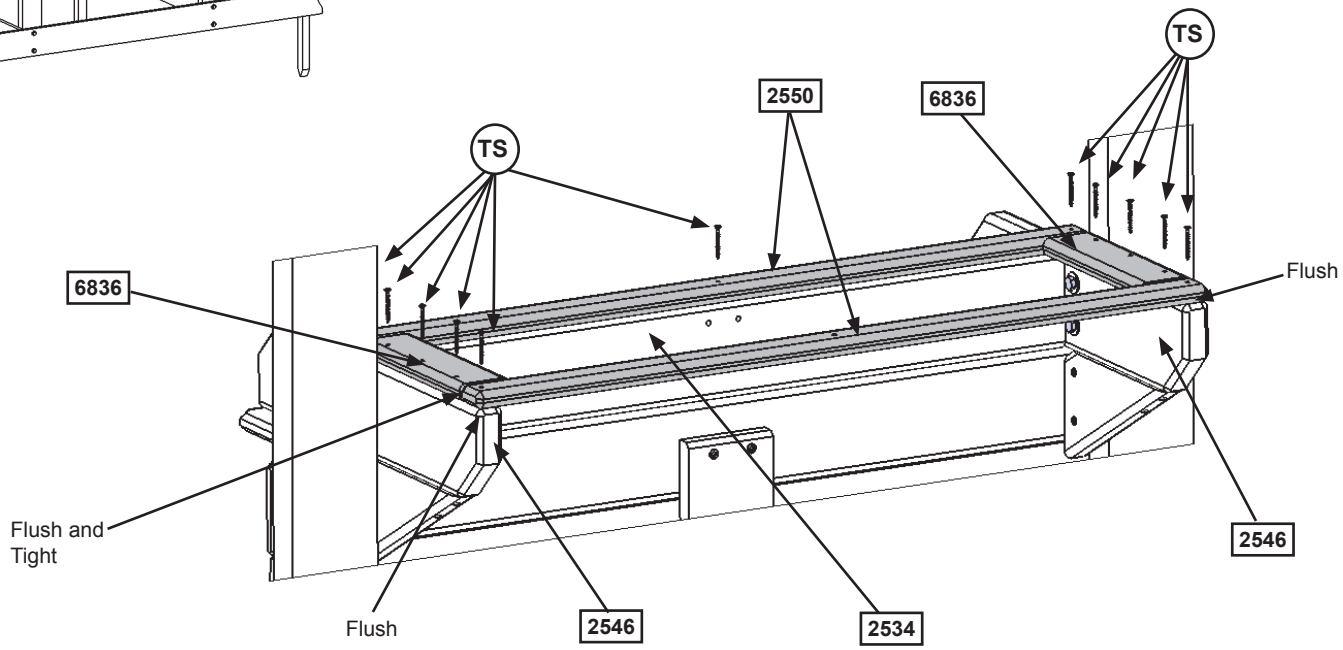

Wood Parts	Hardware
2 x 2550 Counter Top 1 x 2 x 29-1/8”	11 x TS #6 x 30 mm Trim Screw
2 x 6836 Counter Side 5/8 x 2 x 6-7/8”	

support@cedarsummitplay.com

Step 20: Cafe Table Kitchen Assembly Part 2

D: Place (2537) Counter Joist centred over the pilot holes in (2534) Back Board and tight to the bottom of each (2550) Counter Top then attach to (2534) Back Board with 2 (S15) #8 x 1-3/4” Wood Screws. (fig. 20.3 and 20.4)

E: Place (2549) Counter Front flush to front and outside edges of each (2546) Table Support and flush to the top of (2550) Counter Top, notice the pilot holes are towards the bottom, then attach to each (2546) Table Support and (2537) Counter Joist with 4 (S15) #8 x 1-3/4” Wood Screws. (fig. 20.4)

F: Attach (2550) Counter Top to (2537) Counter Joist with 1 (TS) #6 x 30 mm Trim Screw. (fig. 20.4)

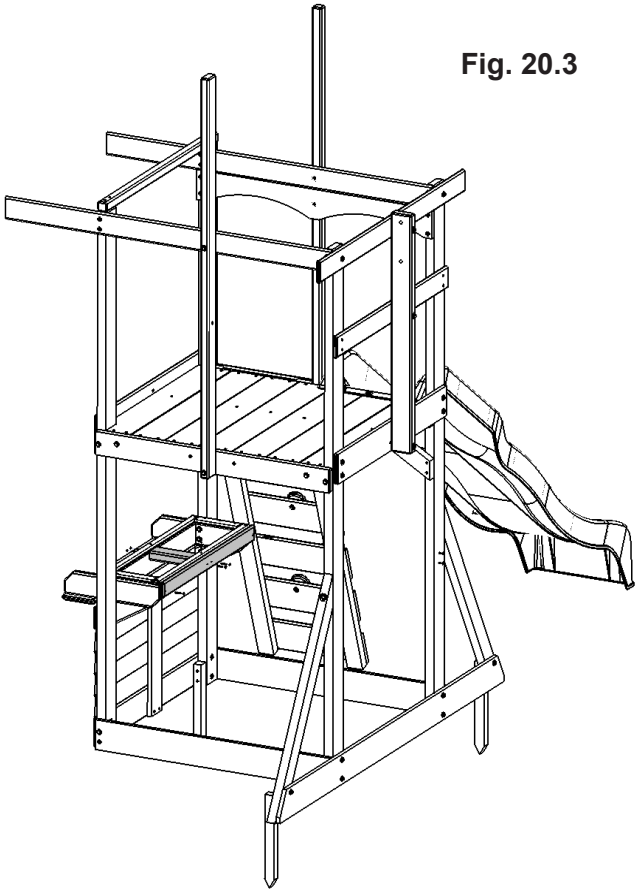

Fig. 20.3

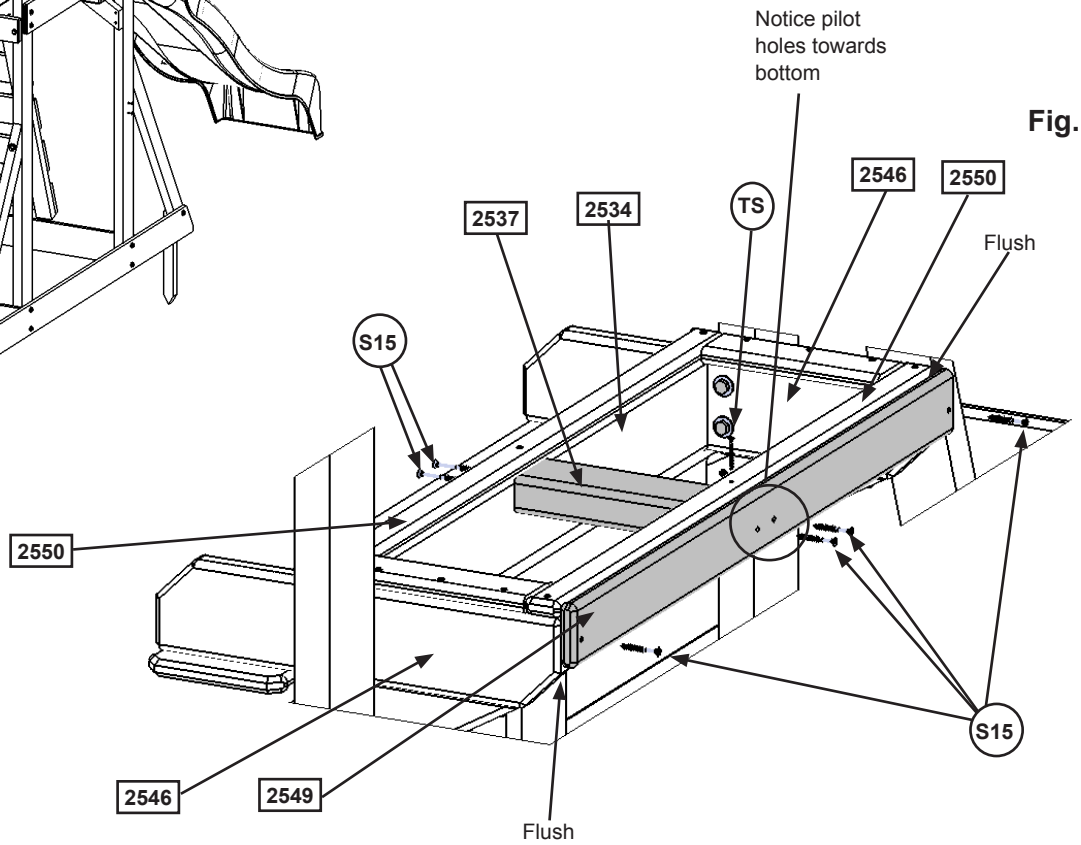

Fig. 20.4

Wood Parts	Hardware
1 x 2537 Counter Joist 2 x 3 x 8-1/2”	6 x S15 #8 x 1-3/4” Wood Screw
1 x 2549 Counter Front 1 x 3 x 29-1/8”	1 x TS #6 x 30 mm Trim Screw

support@cedarsummitplay.com

Step 20: Cafe Table Kitchen Assembly Part 3

G: Centre 2 (2544) Counter Middles over (2537) Counter Joist and attach with 2 (TS) #6 x 30 mm Trim Screws per board. (fig. 20.5 and 20.6)

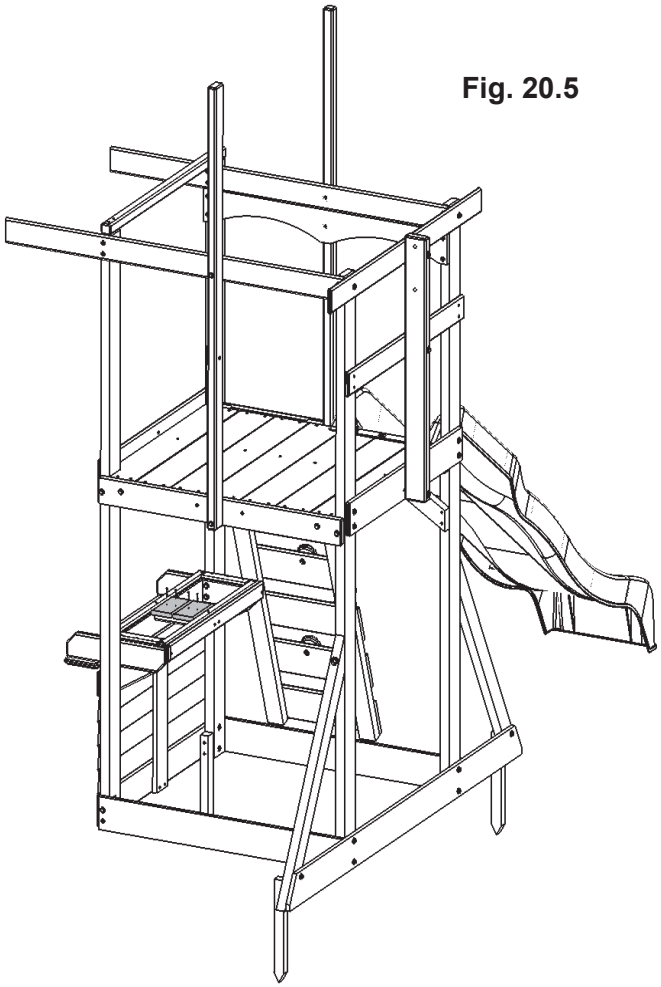

Fig. 20.5

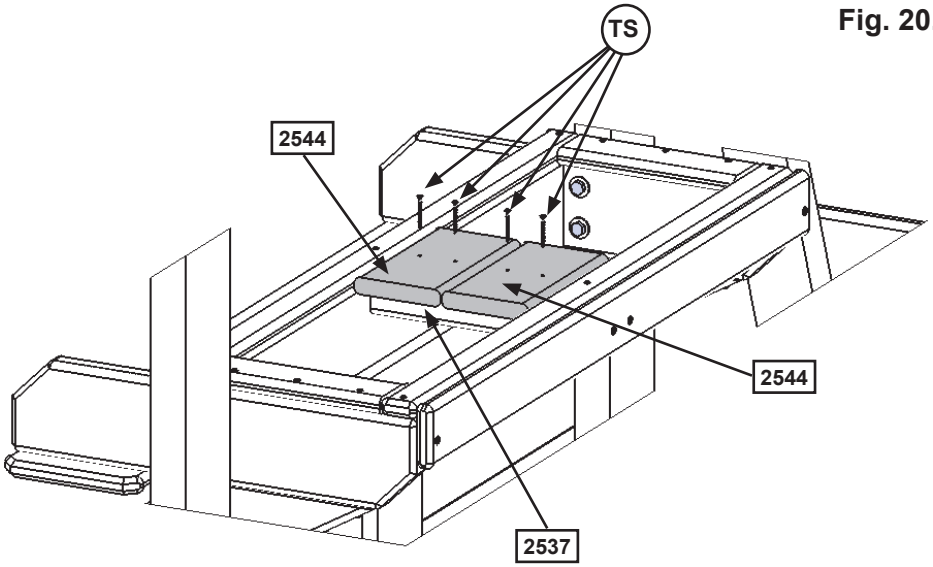

Fig. 20.6

Wood Parts

2 x 2544 **Counter Middle 1 x 4 x 6-1/8”**

Hardware

4 x TS **#6 x 30 mm Trim Screw**

Step 20: Cafe Table Kitchen Assembly Part 4

H: Place Faucet and 2 Sink Knobs in opening of Sink and attach Sink Knobs with 1 #6 x 10 mm Blunt Point Pan Screw (included in Kitchen Set box) per Sink Knob. (fig. 20. 9)

I: Loosely attach 4 Mount Clips to the bottom of the Sink and Stove using 1 #6 x 10 mm Blunt Point Pan Screw (included in Kitchen Set box) for each Mount Clip as shown in fig. 20.9.

Important: Use a hand held screw driver and DO NOT over tighten.

J: Place Sink and Stove in the openings of the Cafe Table Kitchen Assembly then tighten the Mount Clips to secure in place. (fig. 20.7, 20.8 and 20.9)

Note: To remove the Sink or Stove loosen screw 1/4 turn then twist Mount Clips.

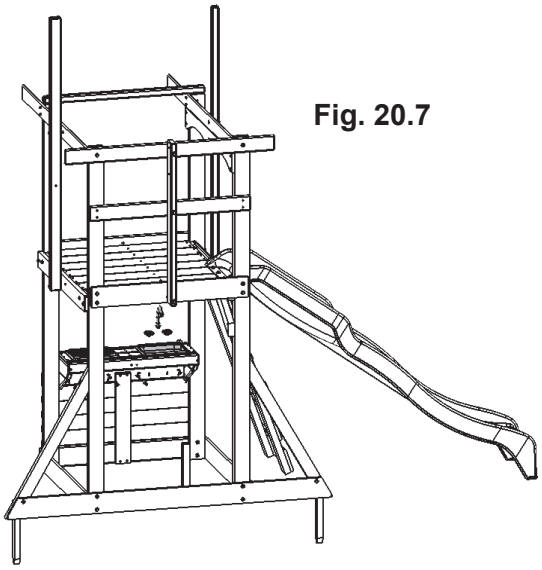

Fig. 20.7

Fig. 20.8

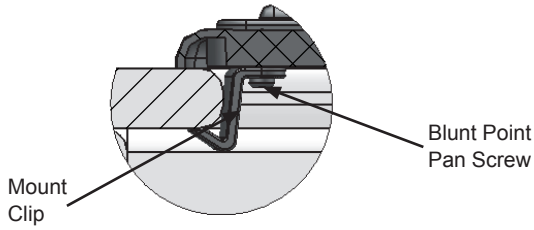

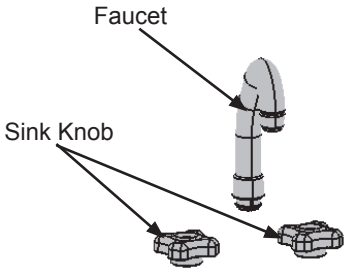

Fig. 20.9

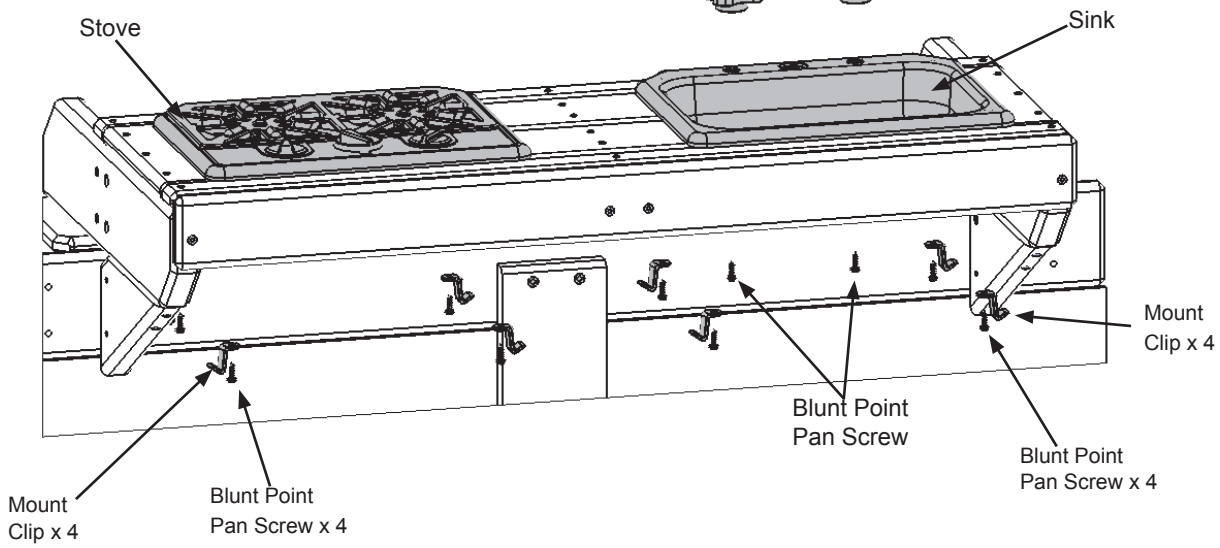

Other Parts

1 x Kitchen Set w/included hardware:

2 x Sink Knob	**1 x Stove**
8 x Mount Clip	**1 x Sink**
1 x Faucet	

support@cedarsummitplay.com

Step 21: Cafe Side Wall Assembly

A: Measure 18” up from the top of (2032) End Floor and attach (2533) Kitchen Wall Support to each (1931) Post with 4 (S2) #8 x 1-1/2” Wood Screws. (fig. 21.1, 21.2 and 21.3)

B: In between both (1931) Posts, tight to (1890) CE Gap Board attach 6 (1503) Wall Boards to (2533) Kitchen Wall Support and (2032) End Floor using 4 (S0) #8 x 7/8” Truss Screws per board. The gap between the middle boards should be 3-1/2”. The gaps between the other boards should be evenly spaced. Make sure the bevelled edges are facing out and are at the top of the boards. (fig. 21.1, 21.2 and 20.3)

Fig. 21.1

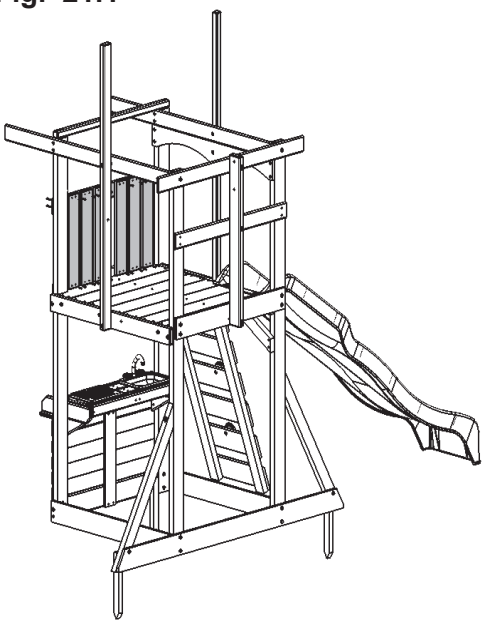

Fig. 21.2
Outside View

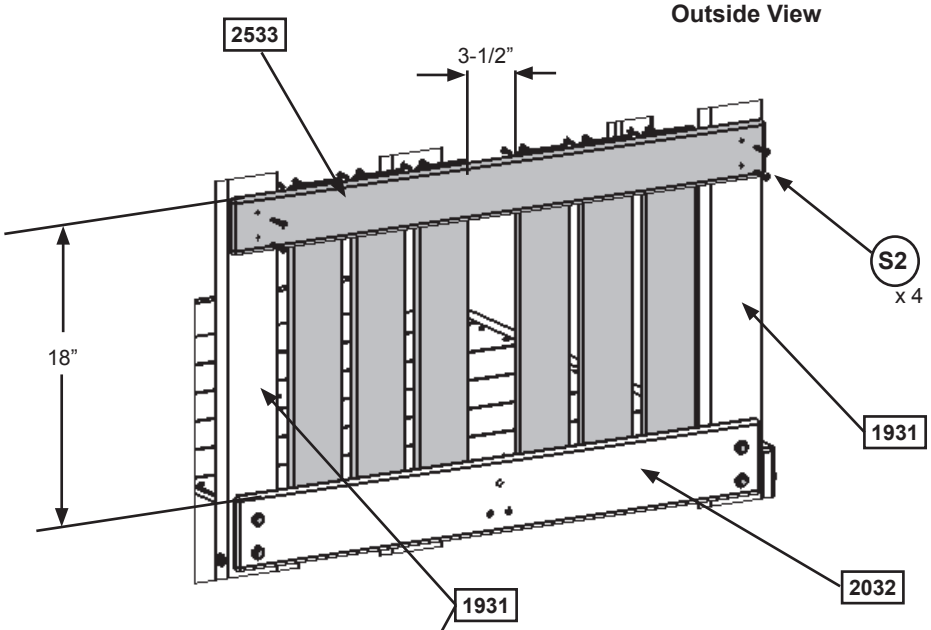

Fig. 21.3
Inside View

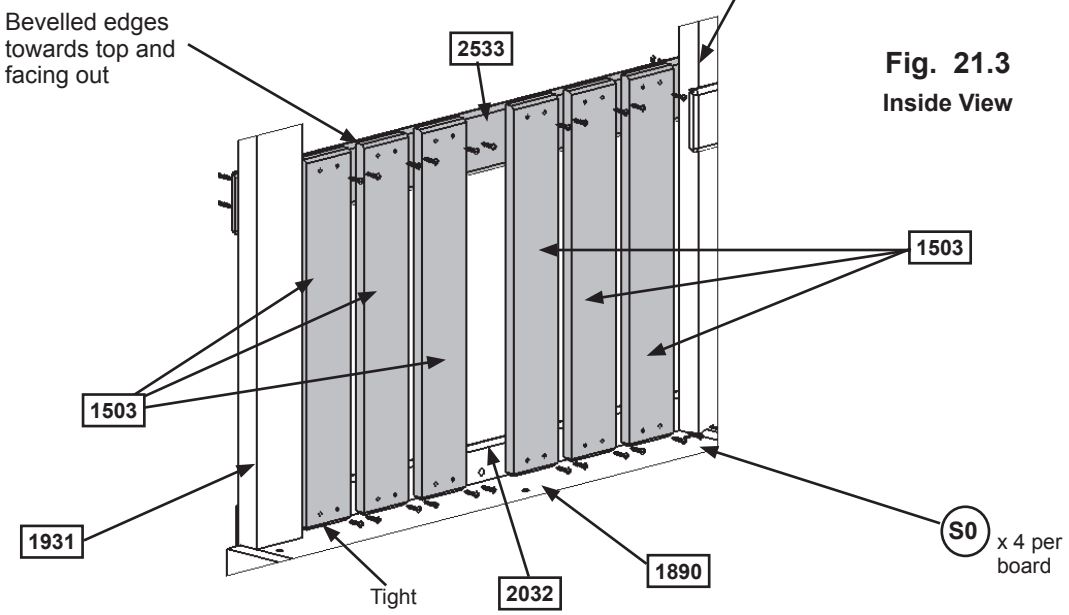

Note: Gaps between boards evenly spaced

Wood Parts		Hardware	
1 x 2533	Kitchen Wall Support 1 x 4 x 35-7/8”	4 x S2	#8 x 1-1/2” Wood Screw
6 x 1503	Wall Board 1/2 x 4 x 20”	24 x S0	#8 x 7/8” Truss Screw

support@cedarsummitplay.com

Step 22: Clock Roof Assembly Part 1

A: Place 1 (2535) Clock Roof Support flush to the bevelled edge of (2543) Clock Roof A with angled edges facing up. There will be a 5/8” overhang on (2543) Clock Roof A. Attach with 3 (TS) #6 x 30 mm Trim Screws. (fig. 22.1)

B: Place 1 (2535) Clock Roof Support flush to the beveled edge of (2551) Clock Roof B with angled edges facing up then attach with 3 (TS) #6 x 30 mm Trim Screws. (fig. 22.2)

Fig. 22.1

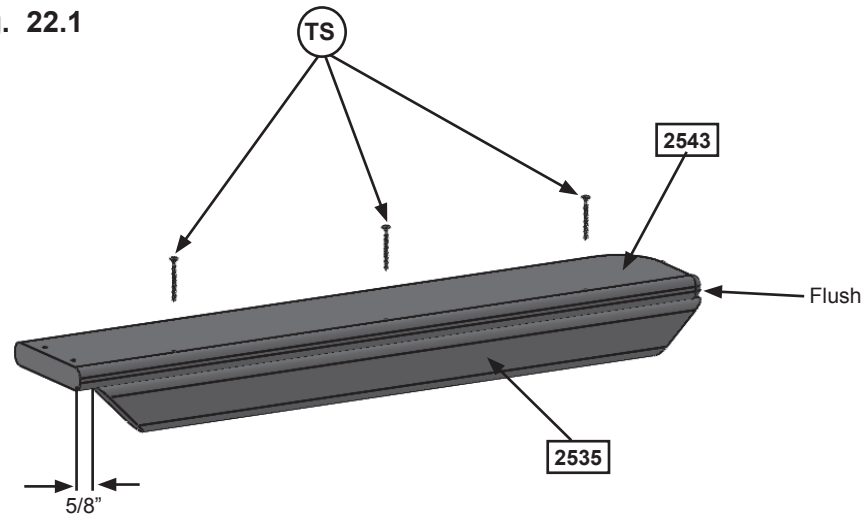

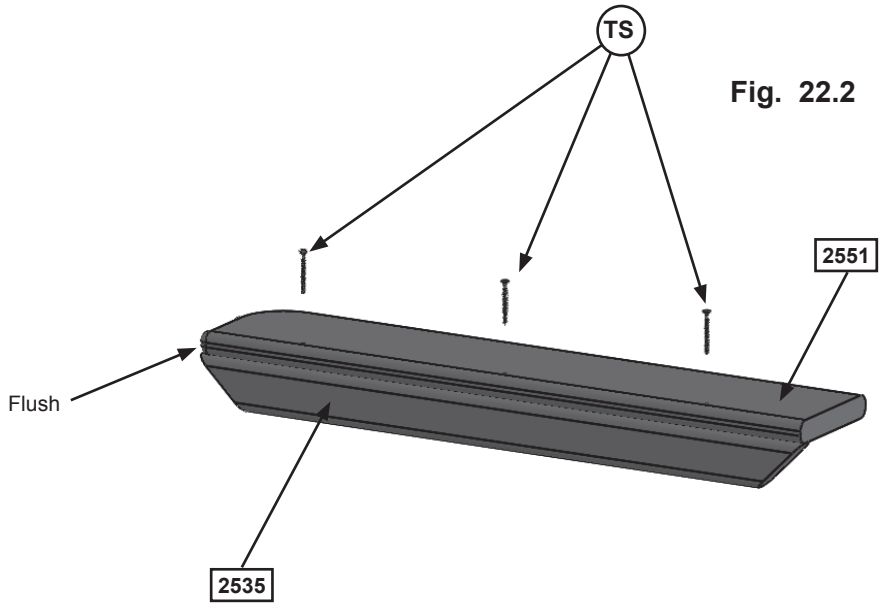

Fig. 22.2

Wood Parts	Hardware
1 x 2543 Clock Roof A 1 x 4 x 18-3/4”	6 x TS #6 x 30 mm Trim Screw
1 x 2551 Clock Roof B 1 x 4 x 18-1/8”	
2 x 2535 Clock Roof Support 1 x 2 x 18-1/8”	

support@cedarsummitplay.com

Step 22: Clock Roof Assembly Part 2

Pre-drill all pilot holes using a 1/8" drill bit before installing truss screws.

C: On the outside of the assembly place Clock Roof B Assembly with the bevelled edge facing down, tight to (2032) End Floor and the top is centred in large gap opening. From inside the assembly attach (2535) Clock Roof Support to 2 (1503) Wall Boards with 2 (S0) #8 x 7/8" Truss Screws. (fig. 22.3 and 22.4)

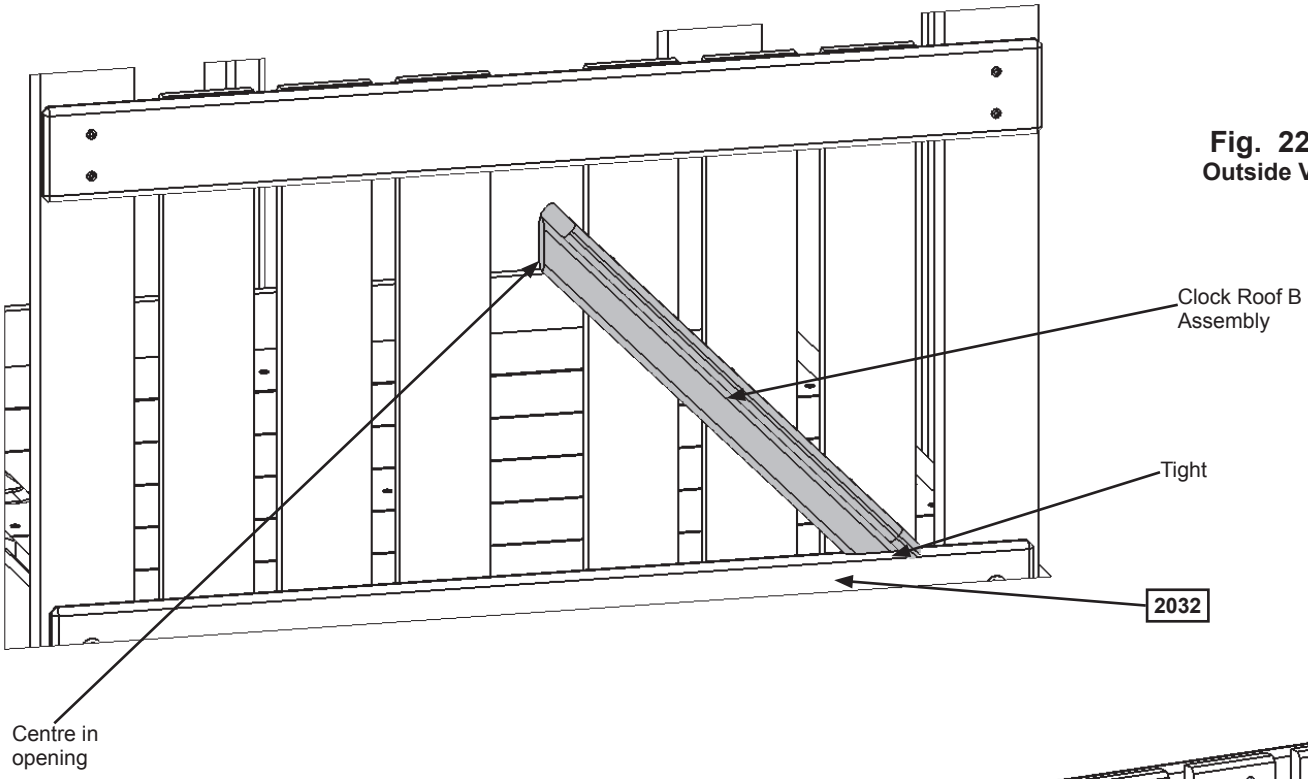

Fig. 22.3
Outside View

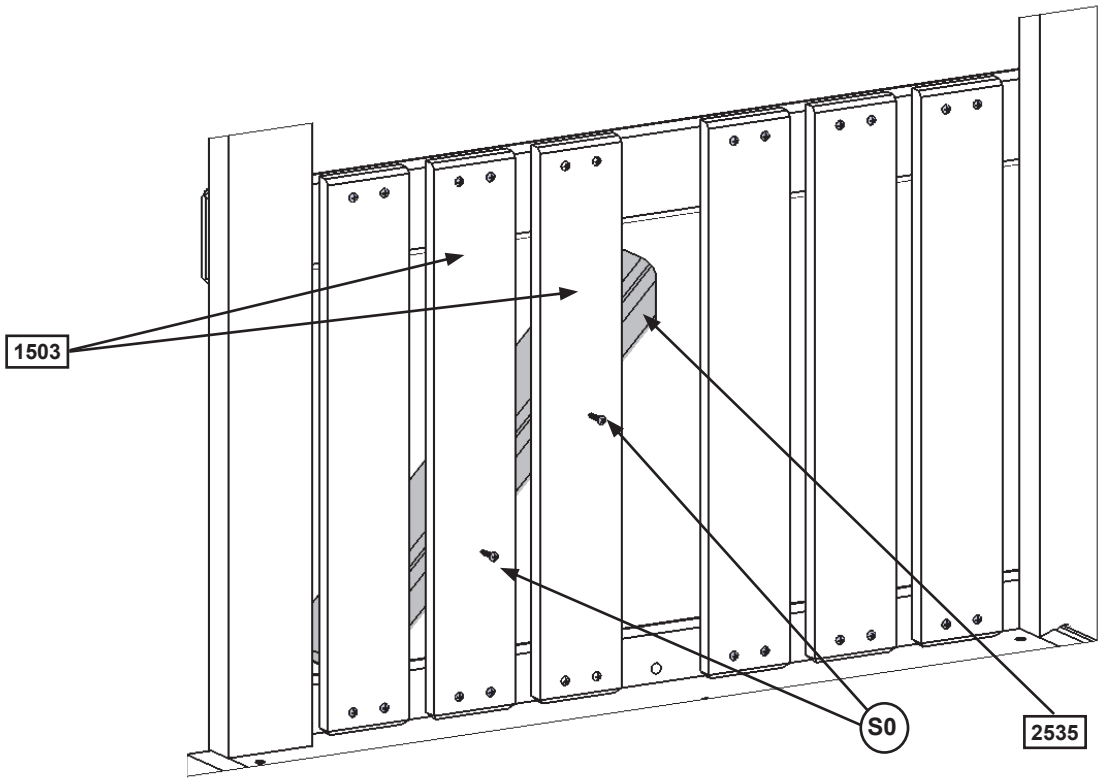

Fig. 22.4
Inside View

Hardware

2 x (S0) #8 x 7/8" Truss Screw

Step 22: Clock Roof Assembly Part 3

Pre-drill all pilot holes using a 1/8" drill bit before installing truss screws.

D: Place Clock Roof A Assembly so the overhanging edge sits flush to the outside face of Clock Roof B Assembly and the other end is tight to (2032) End Floor then attach with 2 (TS) #6 X 30 mm Trim Screws. From inside the assembly attach (2535) Clock Roof Support to 2 (1503) Wall Boards with 2 (S0) #8 x 7/8" Truss Screws. (fig. 22.5 and 22.6)

Fig. 22.5
Outside View

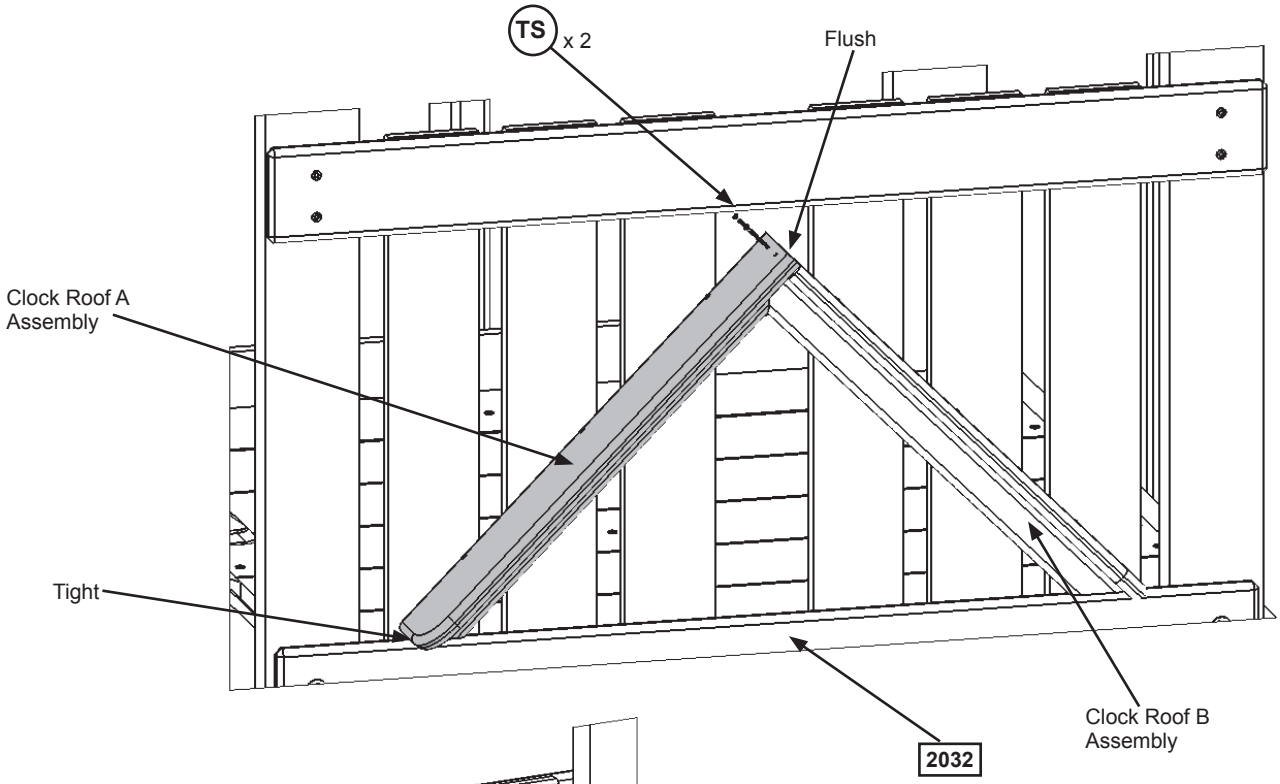

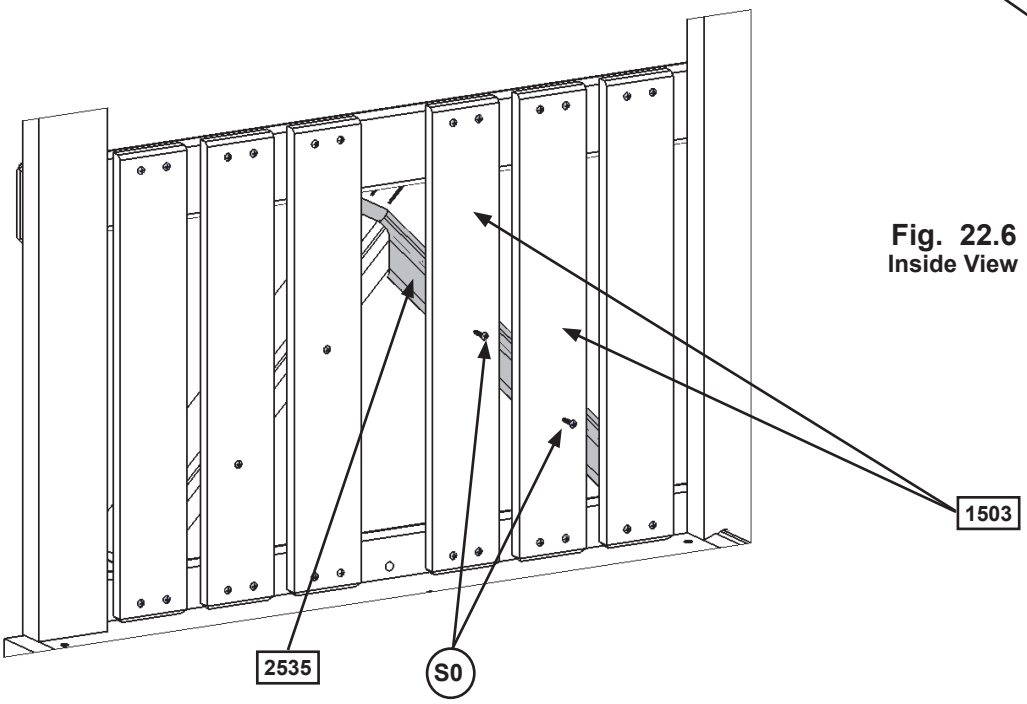

Fig. 22.6
Inside View

Hardware

2 x (S0) #8 x 7/8" Truss Screw

2 x (TS) #6 x 30 mm Trim Screw

Step 22: Clock Roof Assembly Part 4

E: Place Clock Tarp against each (2535) Clock Roof Support so the top is tight to the inside edges of the Roof Assembly and tight to the peak. Make sure the tarp is smooth and tight then attach to (2535) Clock Roof Supports and (2032) End Floor with 4 (S5) #8 x 1/2" Pan Screws (with #8 flat washer) as shown in fig. 22.7, 22.8 and 22.9.

Fig. 22.7

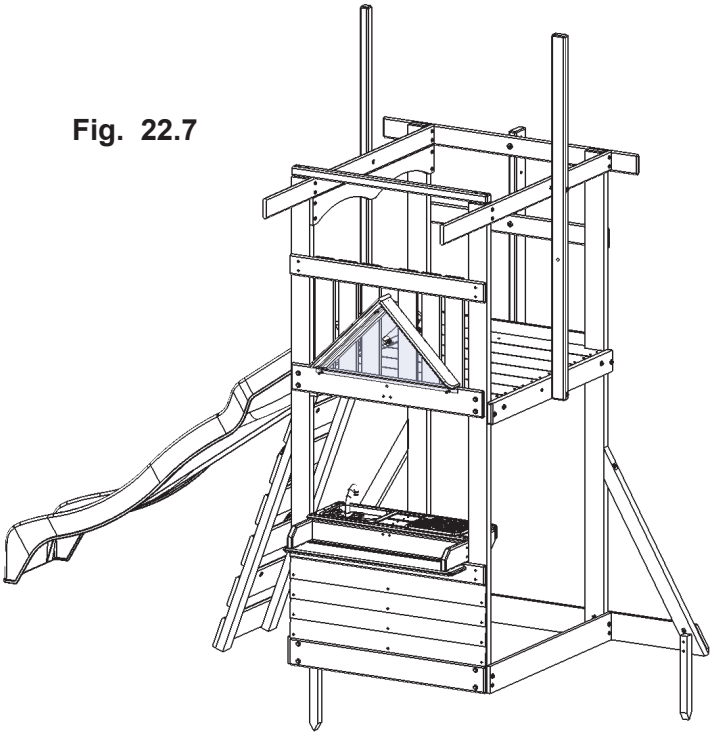

Fig. 22.8

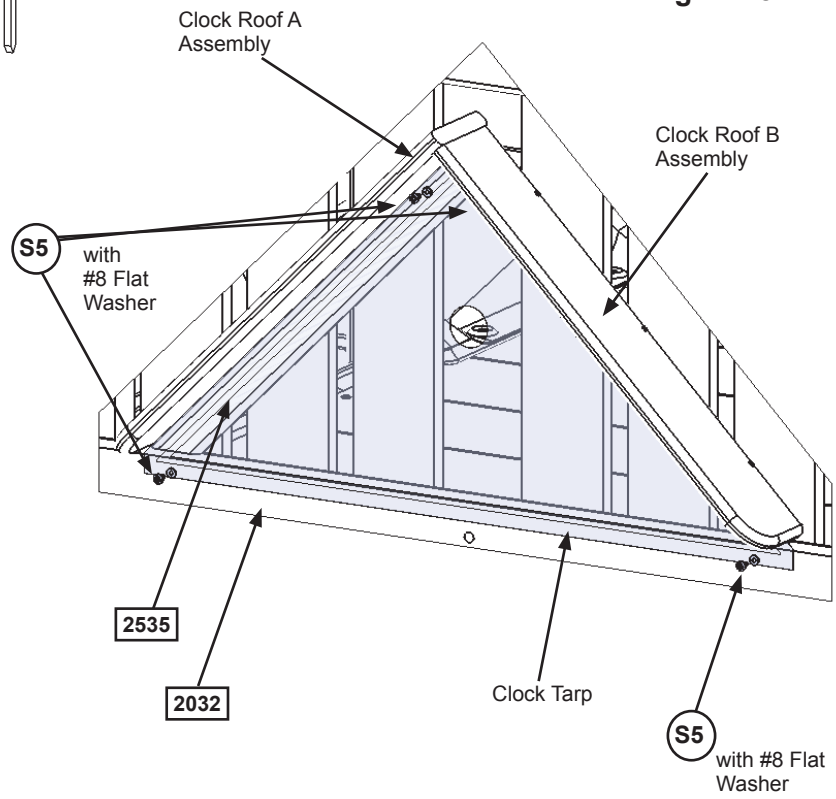

Fig. 22.9

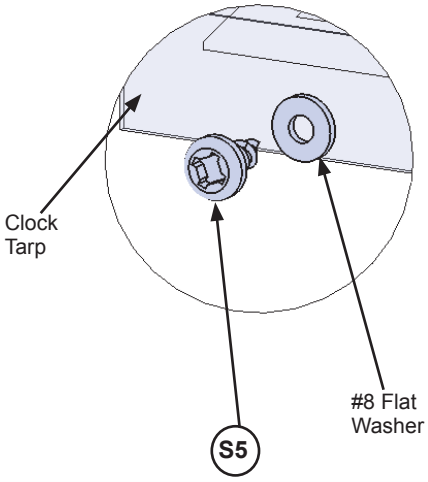

Hardware	Other Parts
4 x (S5) #8 x 1/2" Pan Screw (#8 flat washer)	1 x Clock Tarp

support@cedarsummitplay.com

Step 23: Attach Clock to Fort

A: Place Clock Face against Clock Tarp so edges are tight to Clock Roof Assembly A, Clock Roof Assembly B and (2032) End Floor. The hole in the clock should line up to the hole in the tarp. Attach to each (2535) Clock Roof Support and (2032) End Floor with 4 (S1) #8 x 1-1/8" Wood Screws. (fig. 23.1 and 23.2)

B: From inside the assembly insert Clock Knob in the hole in Clock Tarp, then with 1 person inside the fort and 1 outside place Hour Hand over Clock Knob making sure they are lined up properly. Finally, press Minute Hand over Hour Hand. (fig. 23.3)

Fig. 23.1

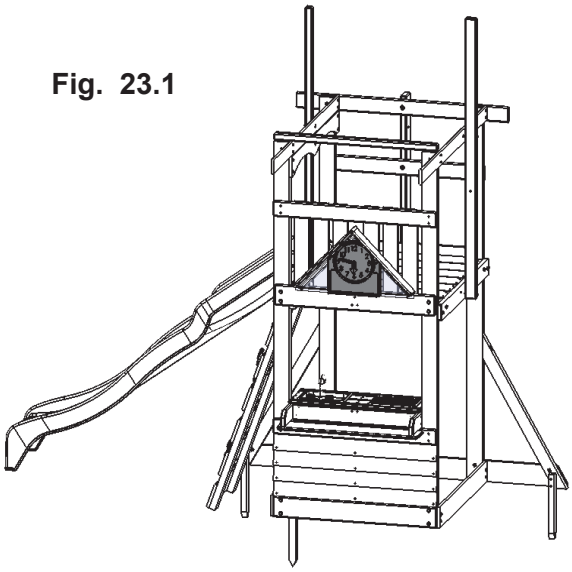

Fig. 23.2

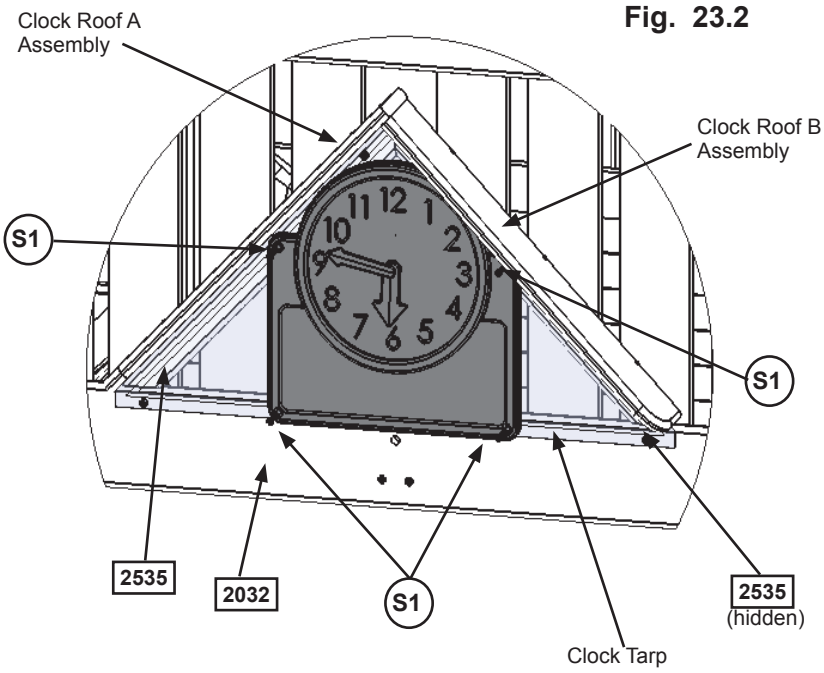

Fig. 23.3

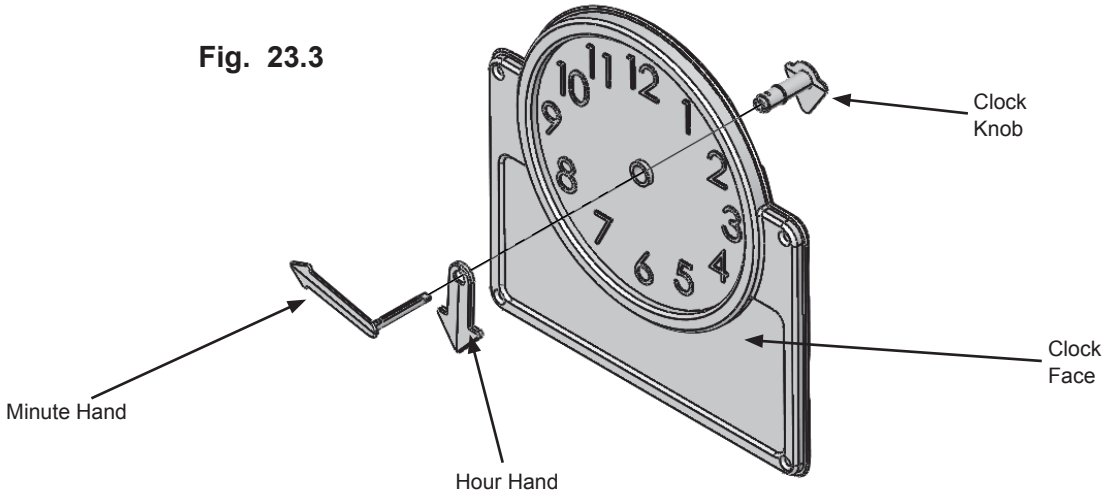

Hardware	Other Parts
4 x (S1) #8 x 1-1/8" Wood Screw	1 x Clock Assembly

support@cedarsummitplay.com

Step 24: Attach Kitchen Side

A: Using the pilot holes as a guide attach (2536) Kitchen Side to each (2532) Top Front Back, making sure the longer end is on the front of the assembly, with 4 (S2) #8 x 1-1/2” Wood Screws. The tops of the boards should be flush to each other. (fig. 24.1 and 24.2)

B: At the 2 corners attach 1 Corner Brace using 3 (S5) #8 x 1/2” Pan Screw per brace as shown in fig. 24.1 and 24.3.

Fig. 24.1

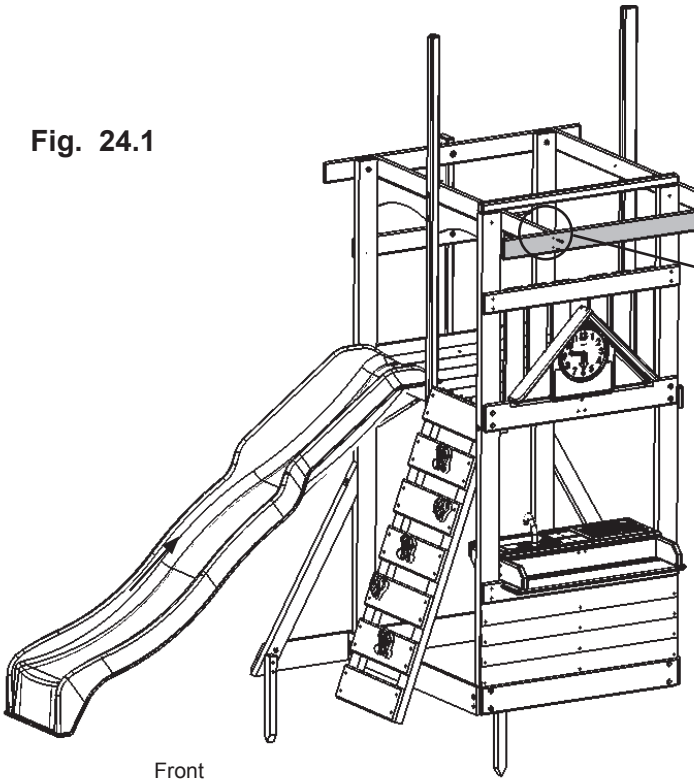

Fig. 24.3

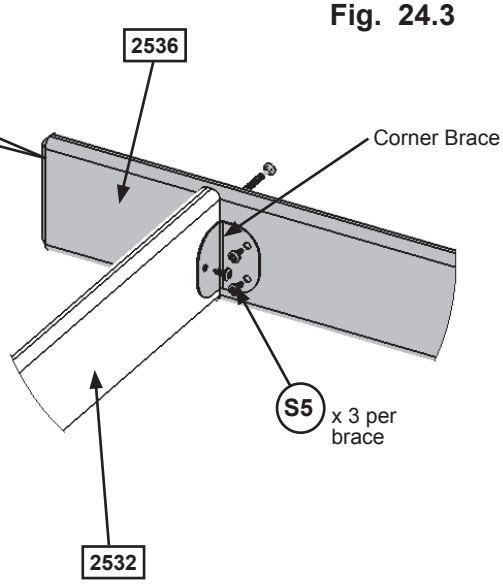

Fig. 24.2

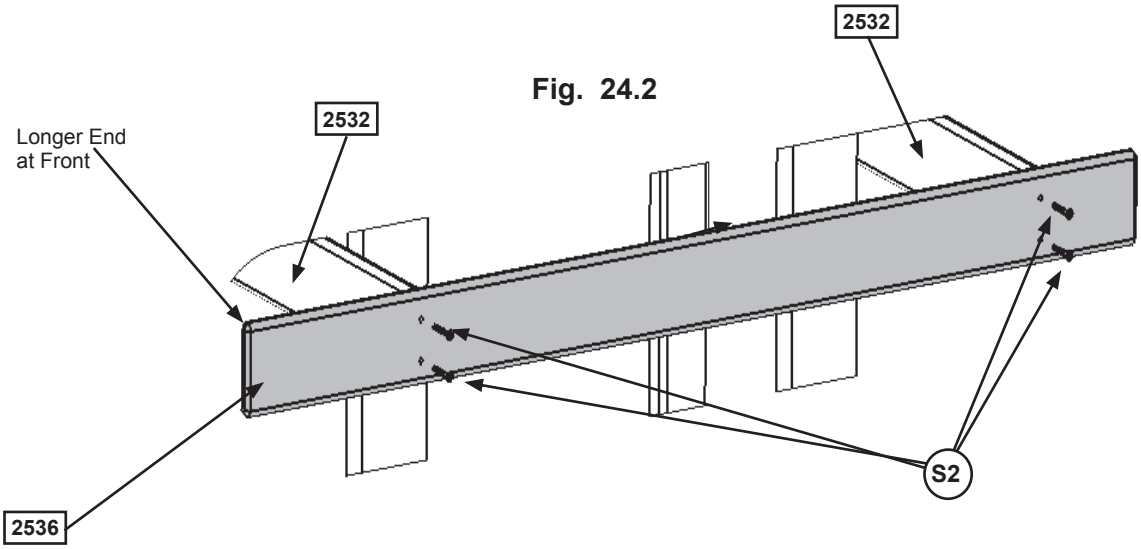

Wood Parts	Hardware	Other Parts
1 x 2536 Kitchen Side 1 x 4 x 46-3/4”	4 x S2 #8 x 1-1/2” Wood Screw	2 x Corner Brace
	6 x S5 #8 x 1/2” Pan Screw	

support@cedarsummitplay.com

Step 25: Attach Roof Ridge

A: Using the pilot holes as a guide attach (2541) Roof Ridge with the longer end on the front of the assembly to (2542) Roof Upright and to (2531) MK Mount with 2 (S3) #8 x 2-1/2” Wood Screws as shown in fig. 25.1 and 25.2.

Fig. 25.1

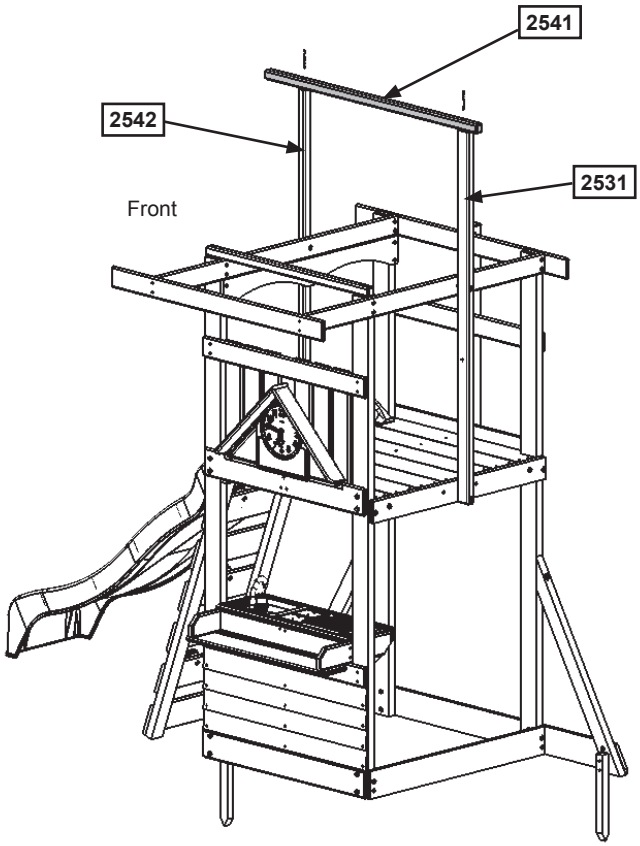

Fig. 25.2

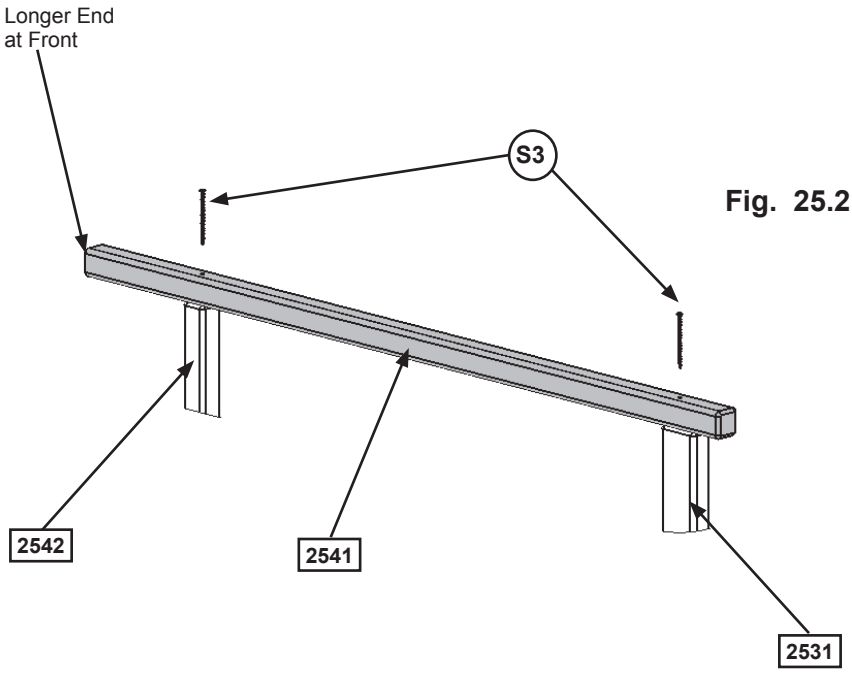

Wood Parts

1 x 2541 **Roof Ridge 2 x 2 x 46-3/4”**

Hardware

2 x S3 **#8 x 2-1/2” Wood Screw**

support@cedarsummitplay.com

Step 26: Attach Canopy to Roof Frame

A: Place Canopy over (2541) Roof Ridge making sure bottom edges of tarp are even on both sides of assembly. (fig. 26.1 and 26.2)

B: Secure one side by attaching Canopy to 1 (2536) Kitchen Side using 4 (S5) #8 x 1/2" Pan Screws (with #8 flat washer). (fig. 26.2)

C: Make sure the Canopy is tight and smooth then secure opposite end of Canopy to (2552) SW Side using 4 (S5) #8 x 1/2" Pan Screws (with #8 flat washer). (fig. 26.2)

D: Attach Canopy to each end of (2541) Roof Ridge with 2 (S5) #8 x 1/2" Pan Screws (with #8 flat washer). (fig. 26.2)

Fig. 26.1

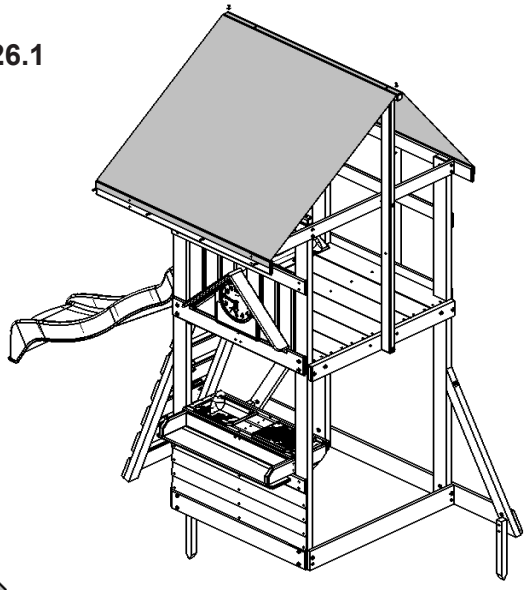

Fig. 26.2

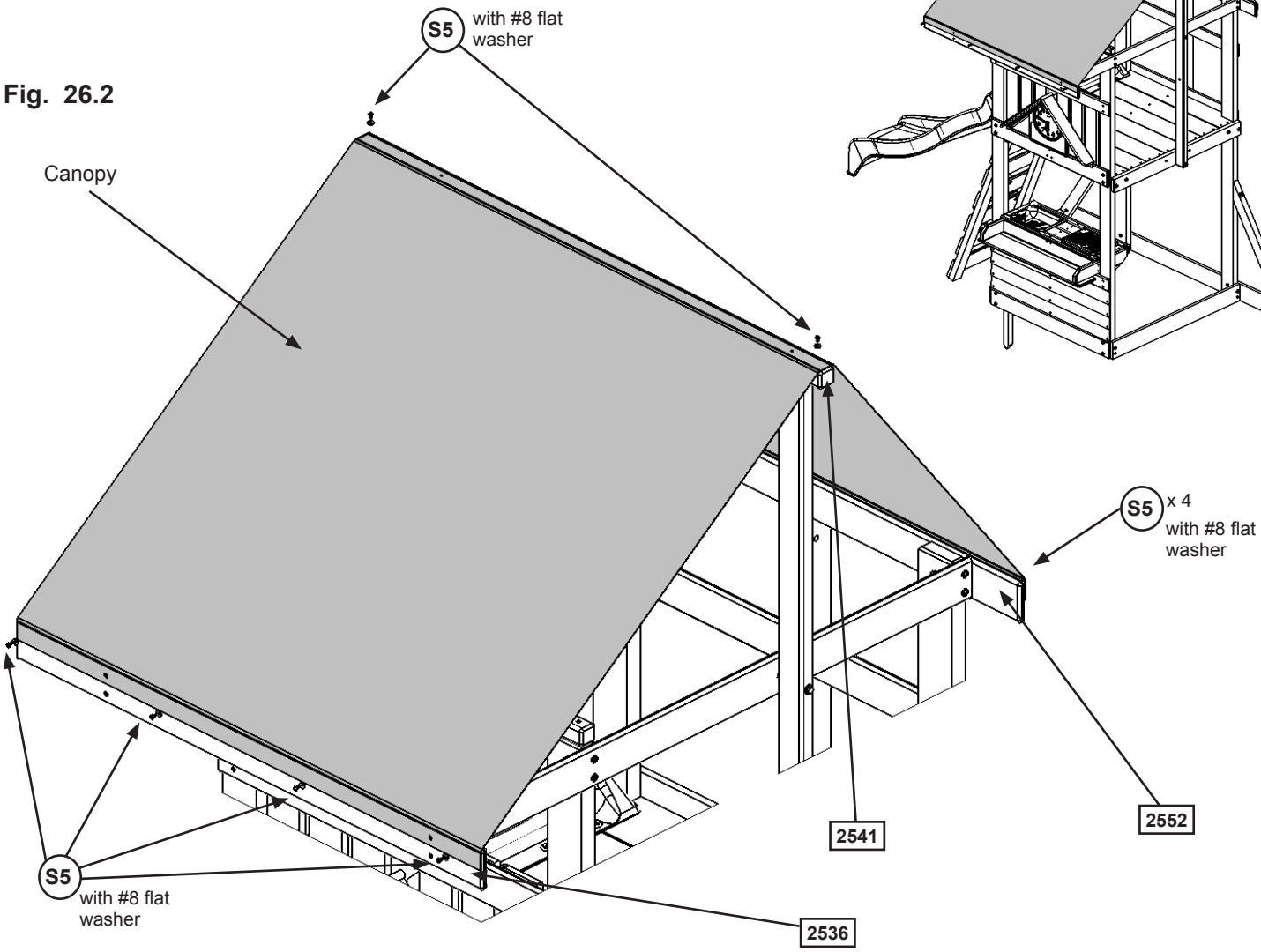

Hardware	Other Parts
10 x (S5) #8 x 1/2" Pan Screw (with #8 flat washer)	1 x Canopy

Step 27: Attach Cafe Bench to Fort

A: On the Cafe Wall centre Cafe Bench from Step 6 on (2538) Ground Cafe then attach each Corner Bracket to (2538) Ground Cafe with 1 (S5) #8 x 1/2” Pan Screw per bracket. (fig. 27.1 and 27.2)

Fig. 27.1

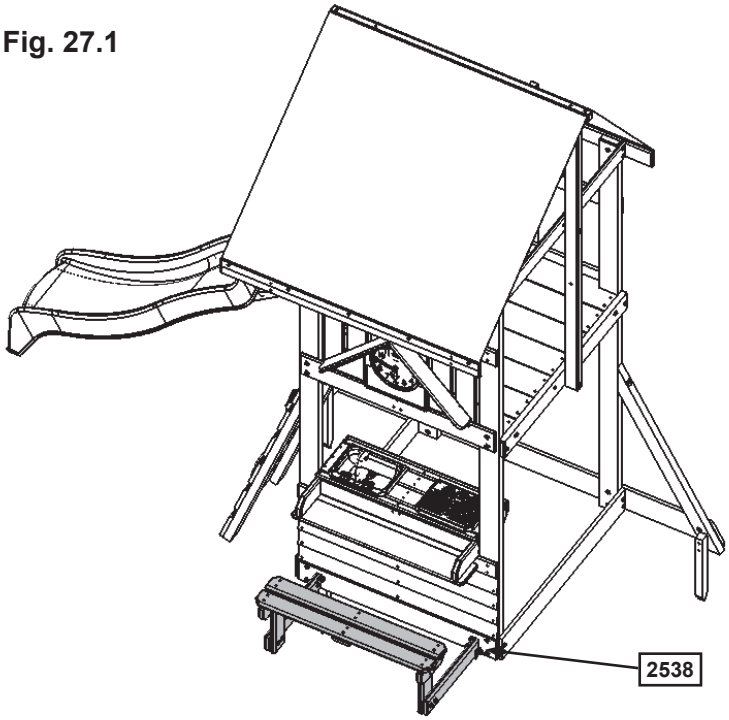

Cafe Wall

Fig. 27.2

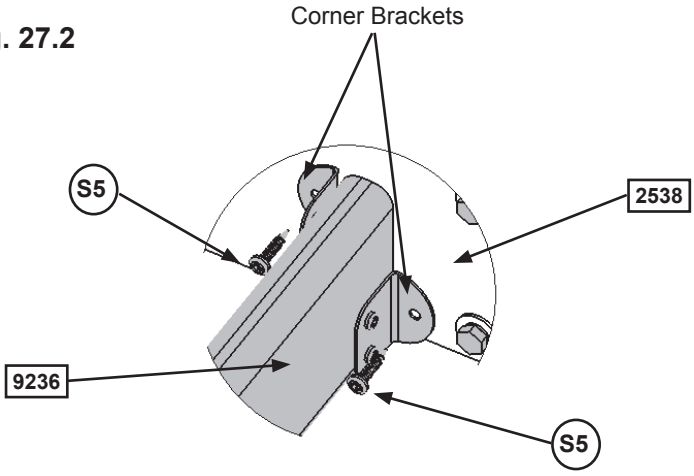

Hardware

4 x (S5) #8 x 1/2” Pan Screw

support@cedarsummitplay.com

Step 28: Attach Wrap Around Tarps Part 1

A: Loosen the 4 bolts indicated on (2029) Ground SW and (1768) Lower Back, in fig. 28.1 and 28.2.

B: Tuck Wrap Around Tarp I between the (1931) Posts and (2029) Ground SW on the Swing Wall, down to the top of the bolts, 1-1/2" from top of board. Tarp should be flush to the outside edges of each (1931) Post. Then from outside the assembly, measure 3/4" up from the top of (2029) Ground SW, on both sides, and attach tarp to both (1931) Posts, 1/2" in from the edge of the tarp, with 2 (S5) #8 x 1/2" Pan Screws (with #8 flat washer). (fig. 28.2)

C: Measure 1-1/2" down from the top of the tarp and attach to both (1931) Posts, 1/2" in from the edge of the tarp, with 2 (S5) #8 x 1/2" Pan Screws (with #8 flat washer). (fig. 28.2)

D: Attach a third (S5) #8 x 1/2" Pan Screw (with #8 flat washer) to each side, 8-7/8" from the first two screws, as shown in fig. 28.2.

E: Repeat Steps B, C and D for Wrap Around Tarp II on the back of the assembly attaching tarp to (1768) Lower Back. (fig. 28.1 and 28.2)

Fig. 28.1

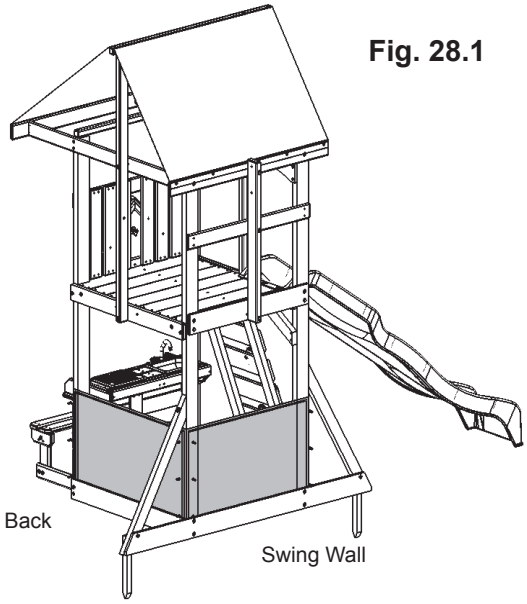

Fig. 28.2

Outside View

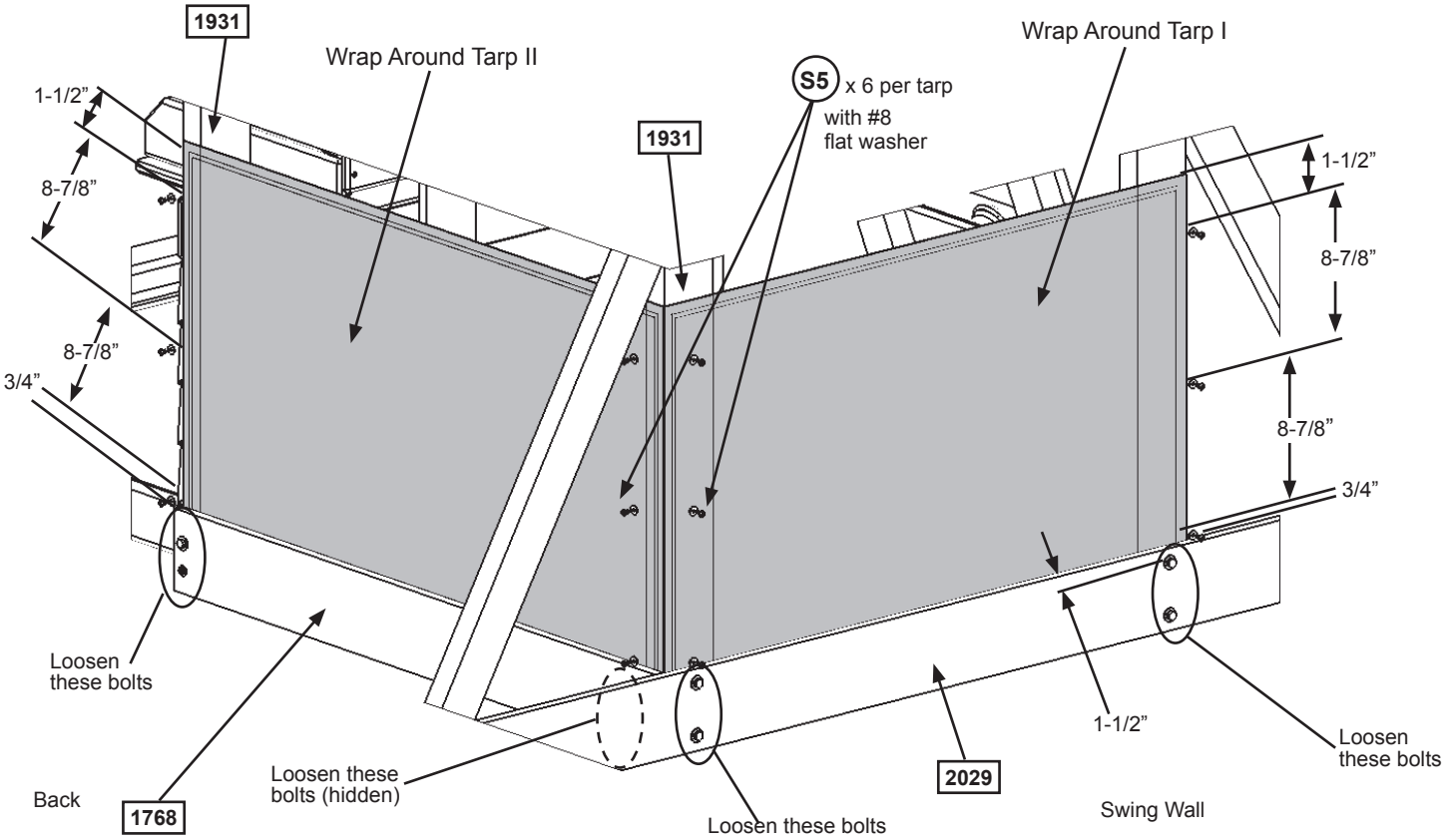

Hardware

12 x (S5) #8 x 1/2" Pan Screw (#8 flat washer)

Other Parts

1 x Wrap Around Tarp I
1 x Wrap Around Tarp II

Step 28: Attach Wrap Around Tarps Part 2

F: On the outside of the assembly measure 18-1/4” up from the top of (2029) Ground SW then place (2533) Kitchen Wall Support to the outside edges of both (1931) Posts on the Swing Wall. Make sure the board is level then attach with 4 (S2) #8 x 1-1/2” Wood Screws. (fig. 28.3 and 28.4)

G: Remove the Lag Screw from the top of (0369) Lower Diagonal then measure 18-1/4” up from the top of (1768) Lower Back and place (0839) CE Gap Board to the outside edges of both (1931) Posts on the back of the assembly. Make sure the board is level then attach with 4 (S2) #8 x 1-1/2” Wood Screws. (fig. 28.3 and 28.4)

Fig. 28.3

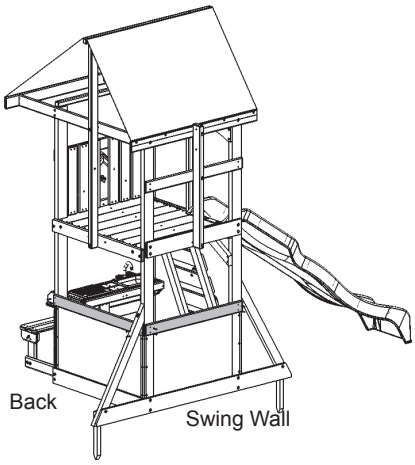

Fig. 28.4
Outside View

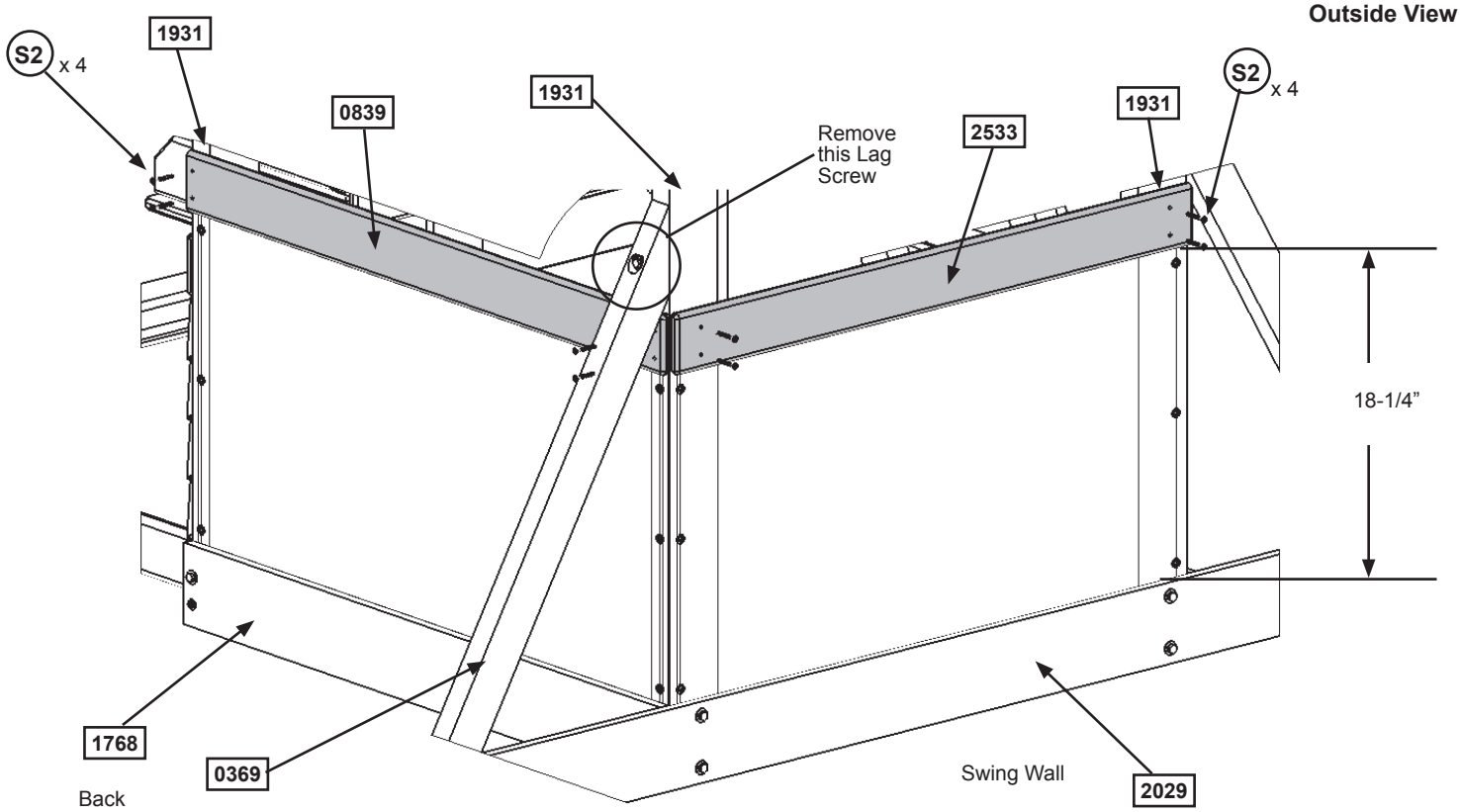

Wood Parts

1 x 2533 **Kitchen Wall Support 1 x 4 x 35-7/8”**
1 x 0839 **CE Gap Board 1 x 4 x 38-3/4”**

Hardware

8 x S2 **#8 x 1-1/2” Wood Screw**

support@cedarsummitplay.com

Step 28: Attach Wrap Around Tarps Part 3

H: From inside of the assembly and 1/2” in from the edge of the tarp, attach Wrap Around Tarp I to (2029) Ground SW and (2533) Kitchen Wall Support with 4 evenly spaced (S5) #8 x 1/2” Pan Screws (with #8 flat washer) per board. (fig. 28.5)

I: From inside of the assembly and 1/2” in from the edge of the tarp, attach Wrap Around Tarp II to (1768) Lower Back and (0839) CE Gap Board with 5 evenly spaced (S5) #8 x 1/2” Pan Screws (with #8 flat washer) per board. (fig. 28.5)

J: Tighten the previously loosened bolts and re-install the Lag Screw from (0369) Lower Diagonal.

Fig. 28.5

Inside View

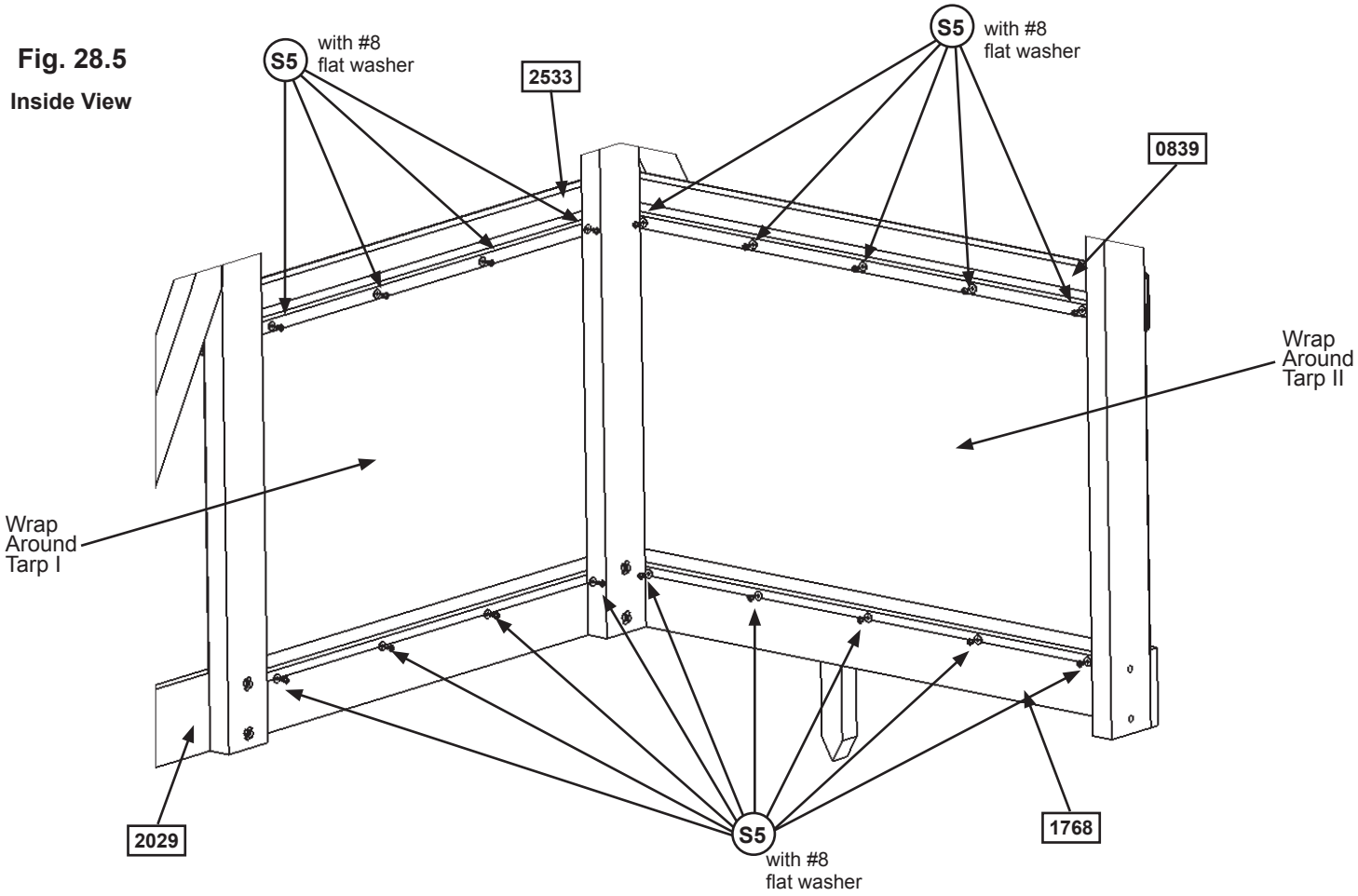

Hardware

18 x (S5) #8 x 1/2” Pan Screw (#8 flat washer)

Step 29: Swing Side Wall Assembly

A: In between both (1931) Posts on Swing Wall attach 6 (1503) Wall Board to (2034) Wall Support and (1895) Floor End using 4 (S0) #8 x 7/8” Truss Screws per board. The gap between boards should be evenly spaced at 1”, not exceeding 1-1/4”. Make sure the bottom of the boards are tight against the floor boards and bevelled edges are facing out and are at the top of the boards. (fig. 29.1 and 29.2)

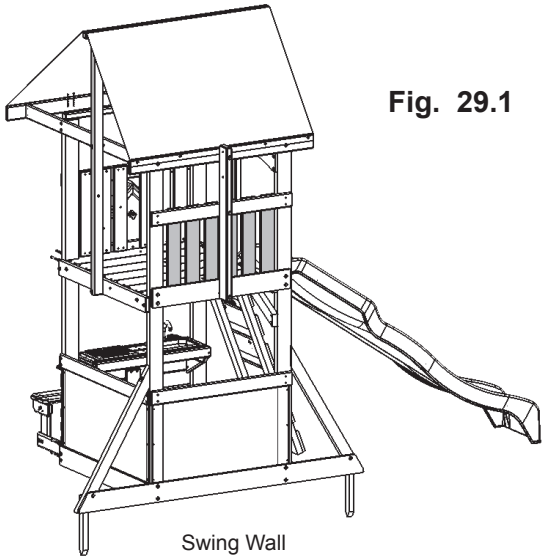

Fig. 29.1

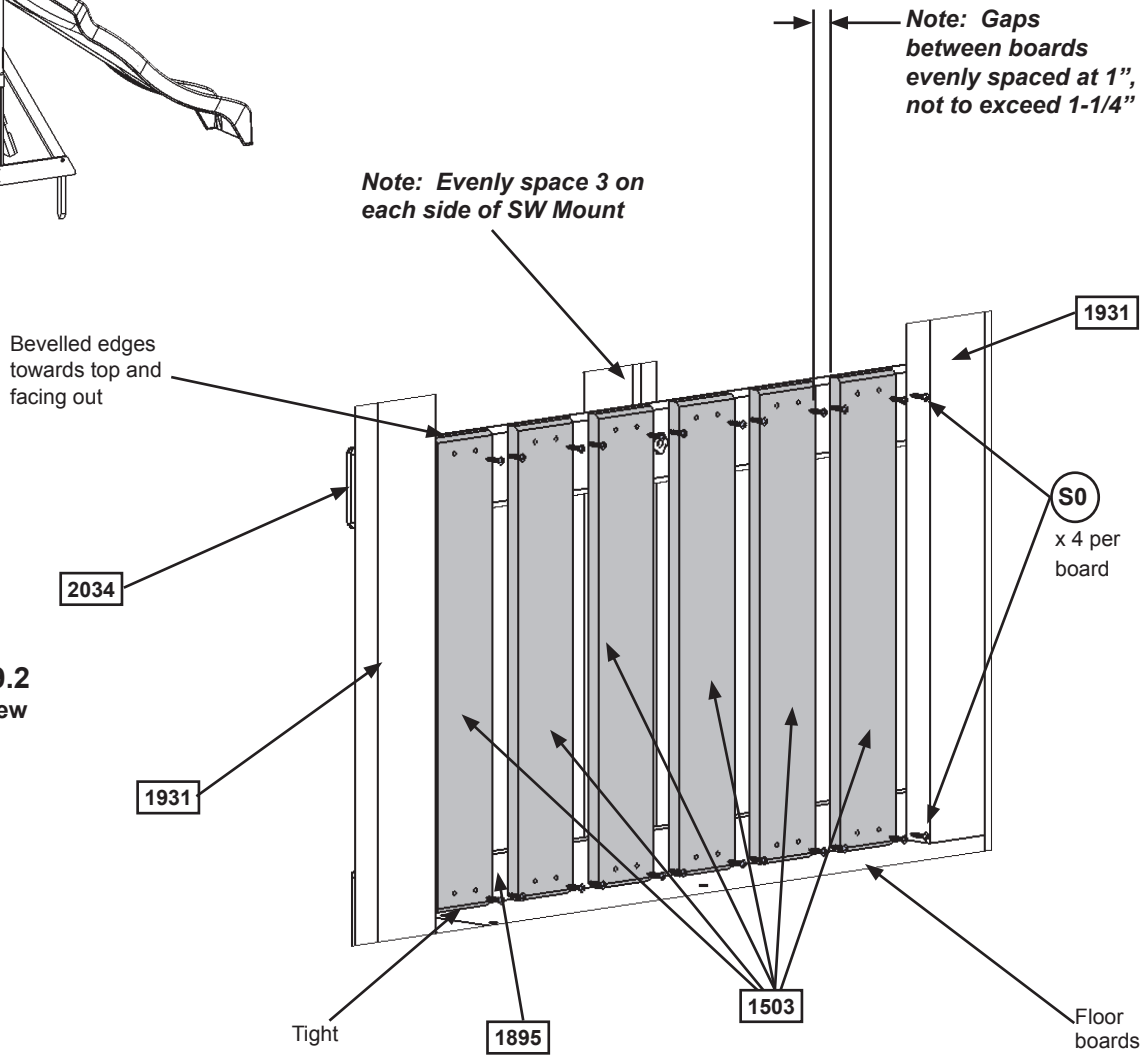

Fig. 29.2
Inside View

Wood Parts	Hardware
6 x 1503 Wall Board 1/2 x 4 x 20”	24 x S0 #8 x 7/8” Truss Screw

support@cedarsummitplay.com

Step 30: Attach Flag and Pole Set to Fort

A: At each end of (2541) Roof Ridge attach 1 Flag and Pole with 2 (S16) #6 x 1” Pan Screws per pole. (fig. 30.1 and 30.2)

Note: The flag can sit vertically or angled depending which side of the pole is installed.

Fig. 30.1

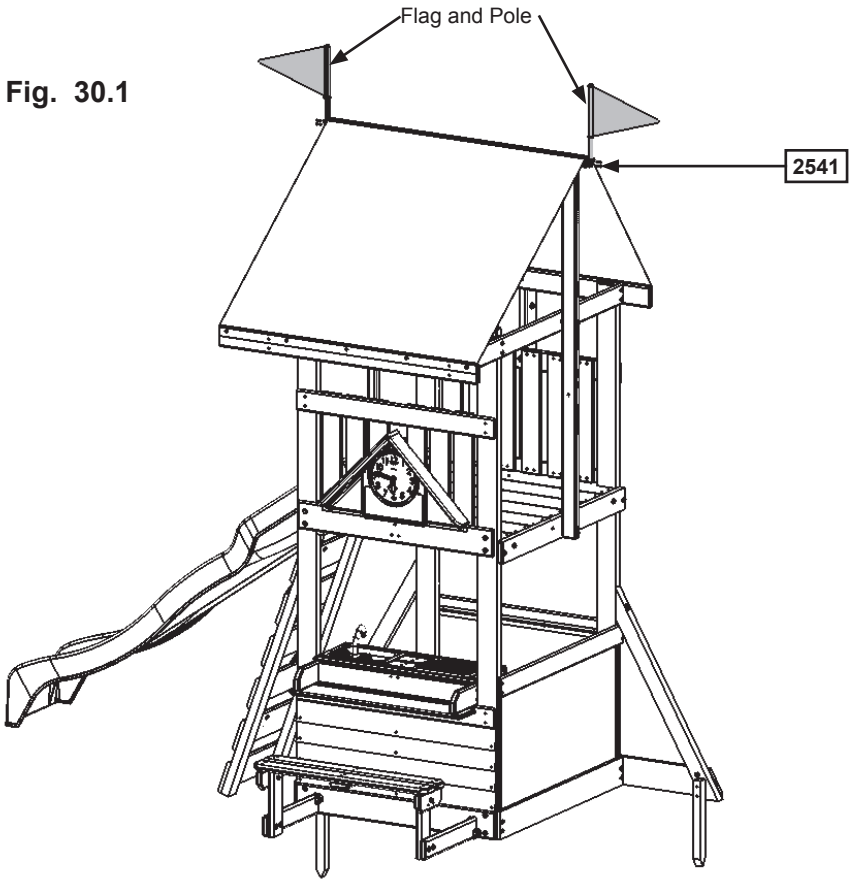

Fig. 30.2

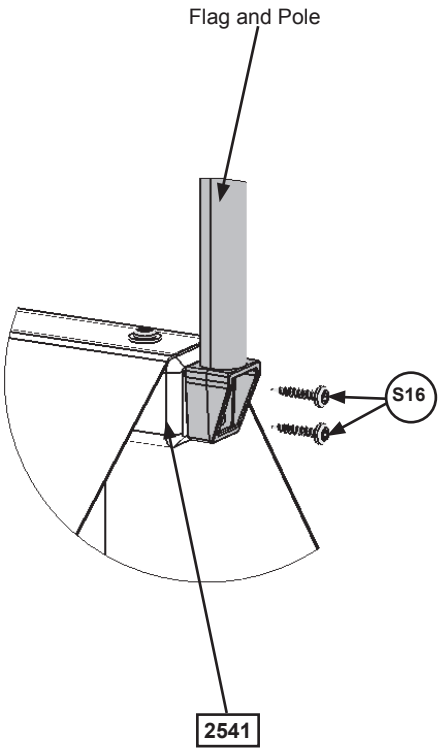

Hardware	Other Parts
4 x (S16) #6 x 1” Pan Screw	2 x Flag and Pole

support@cedarsummitplay.com

Step 31: Attach Utensil Shelf to Fort

A: Place Utensil Shelf centred in the opening of the Cafe Wall then attach to (2032) End Floor with 2 (S5) #8 x 1/2” Pan Screws. (fig. 31.1 and 31.2)

Fig. 31.1

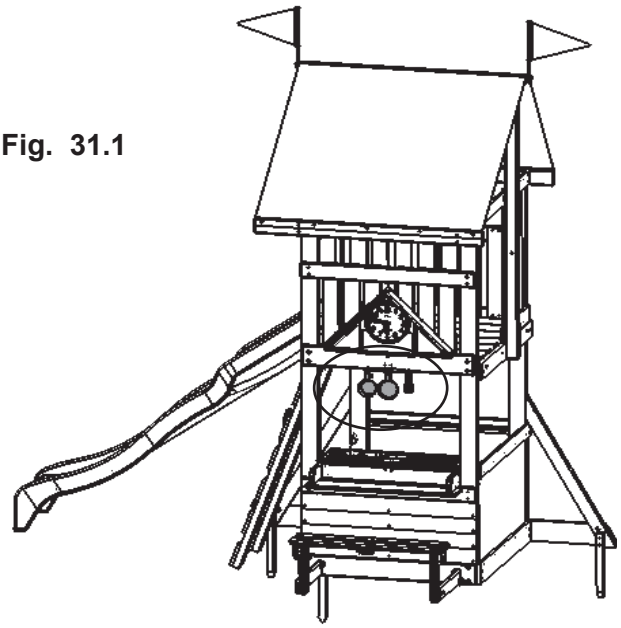

Fig. 31.2

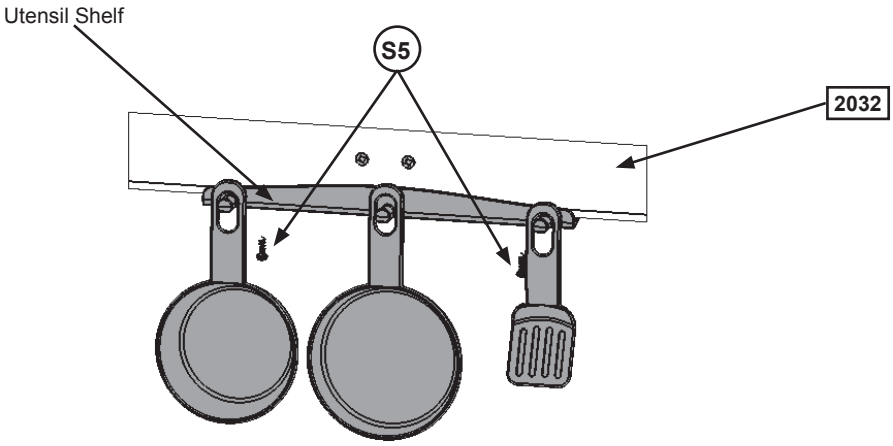

Hardware

2 x (S5) #8 x 1/2” Pan Screw

Other Parts

1 x Utensil Shelf (with Pot, Pan and Spatula)

support@cedarsummitplay.com

Step 32: Attach Swing Assembly to Fort

A: Attach Swing Assembly from Step 5 to (2539) SW Mount with 1 (G5) 5/16 x 4-1/2” Hex Bolt (with lock washer, flat washer and t-nut) and 1 (G8) 5/16 x 2” Hex Bolt (with 2 flat washers and 1 lock nut) as shown in fig. 32.1 and 32.2.

Fig. 32.1

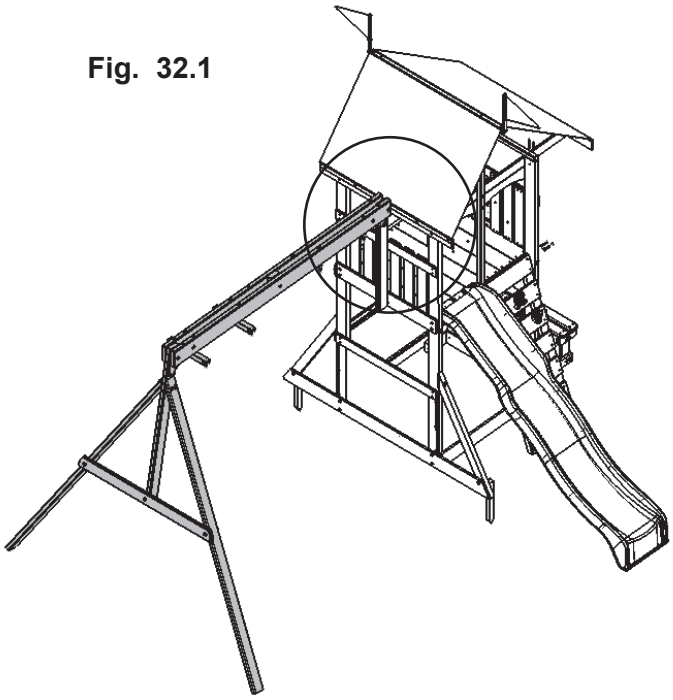

Fig. 32.2

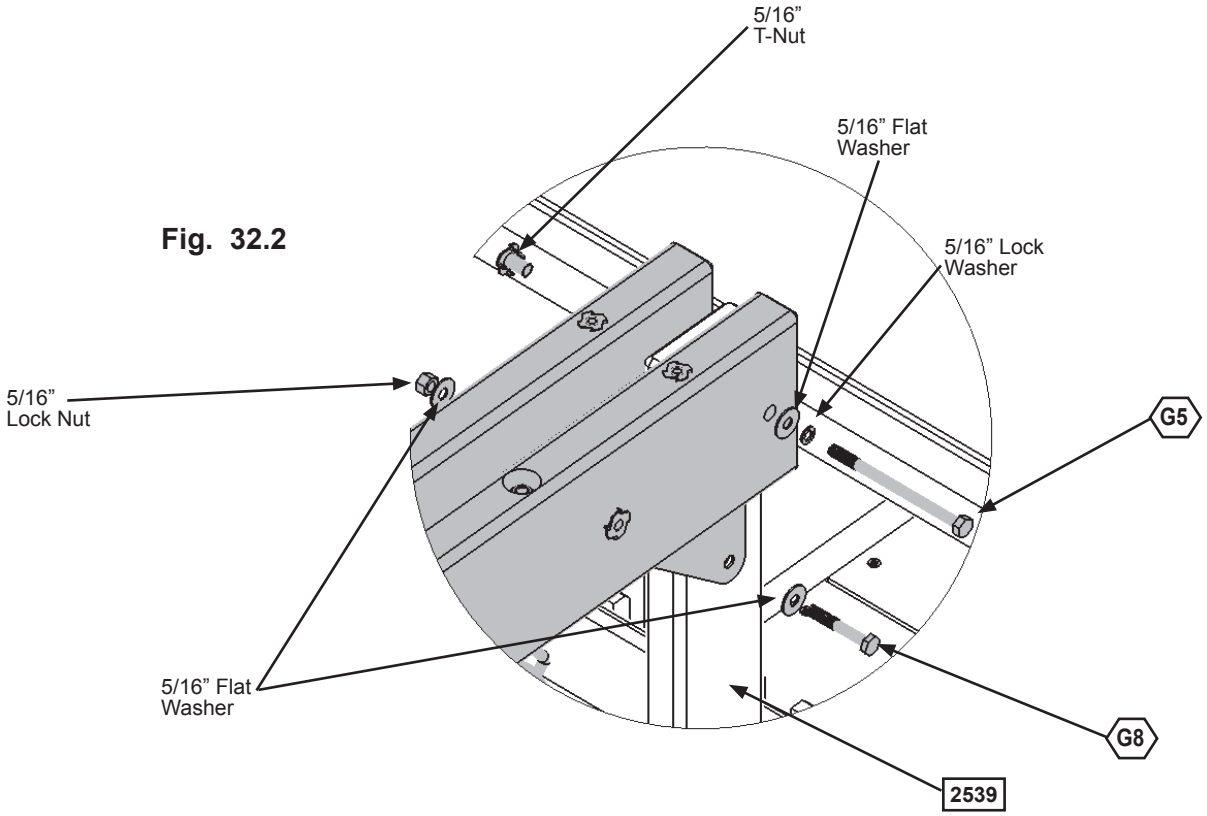

Hardware

1 x G8 5/16 x 2” Hex Bolt
(5/16” flat washer x 2, 5/16” lock nut)

1 x G5 5/16 x 4-1/2” Hex Bolt
(5/16” flat washer, 5/16” lock washer, 5/16” t-nut)

support@cedarsummitplay.com

Step 33: Attach Swing Ground Stakes

A: Drive one (0318) Ground Stake 10-1/2” into the ground at each (1863) SW Post on the outside of the assembly and attach with 2 (S3) #8 x 2-1/2” Wood Screws per ground stake. (fig. 33.1 and 33.2)

⚠WARNING: To prevent tipping and avoid potential injury, stakes must be driven 10-1/2” into ground. Digging or driving stakes can be dangerous if you do not check first for underground wiring, cables or gas lines.

Fig. 33.1

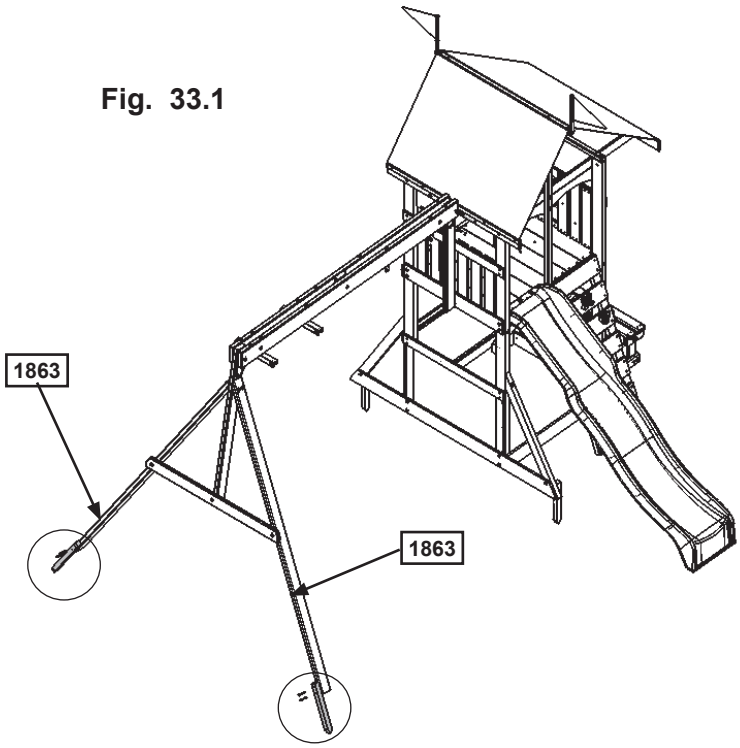

Fig. 33.2

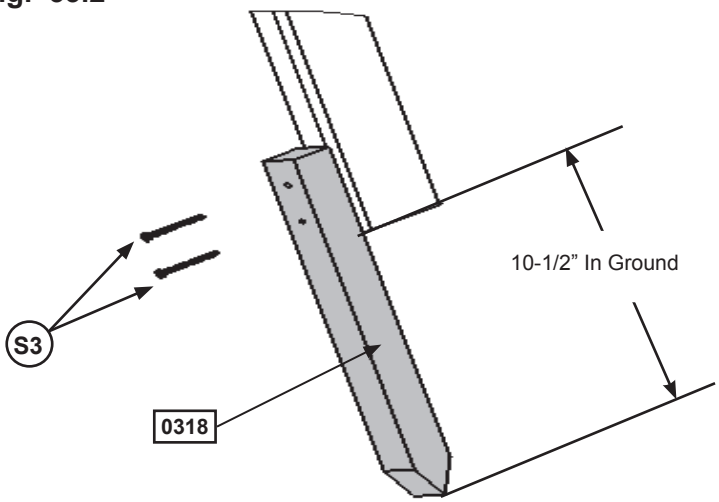

Wood Parts	Hardware
2 x 0318 Ground Stake 1-1/4 x 1-1/2 x 14”	4 x S3 #8 x 2-1/2” Wood Screw

support@cedarsummitplay.com

Step 34: Back Wall Assembly Part 1

A: Place (1227) CE Wall Board, tight to the top of (1894) Back Floor and attach to the outside of (1931) Post on the Swing Wall and to the inside of (2531) MK Mount with 4 (S2) #8 x 1-1/2” Wood Screws as shown in fig. 34.1.

Fig. 34.1

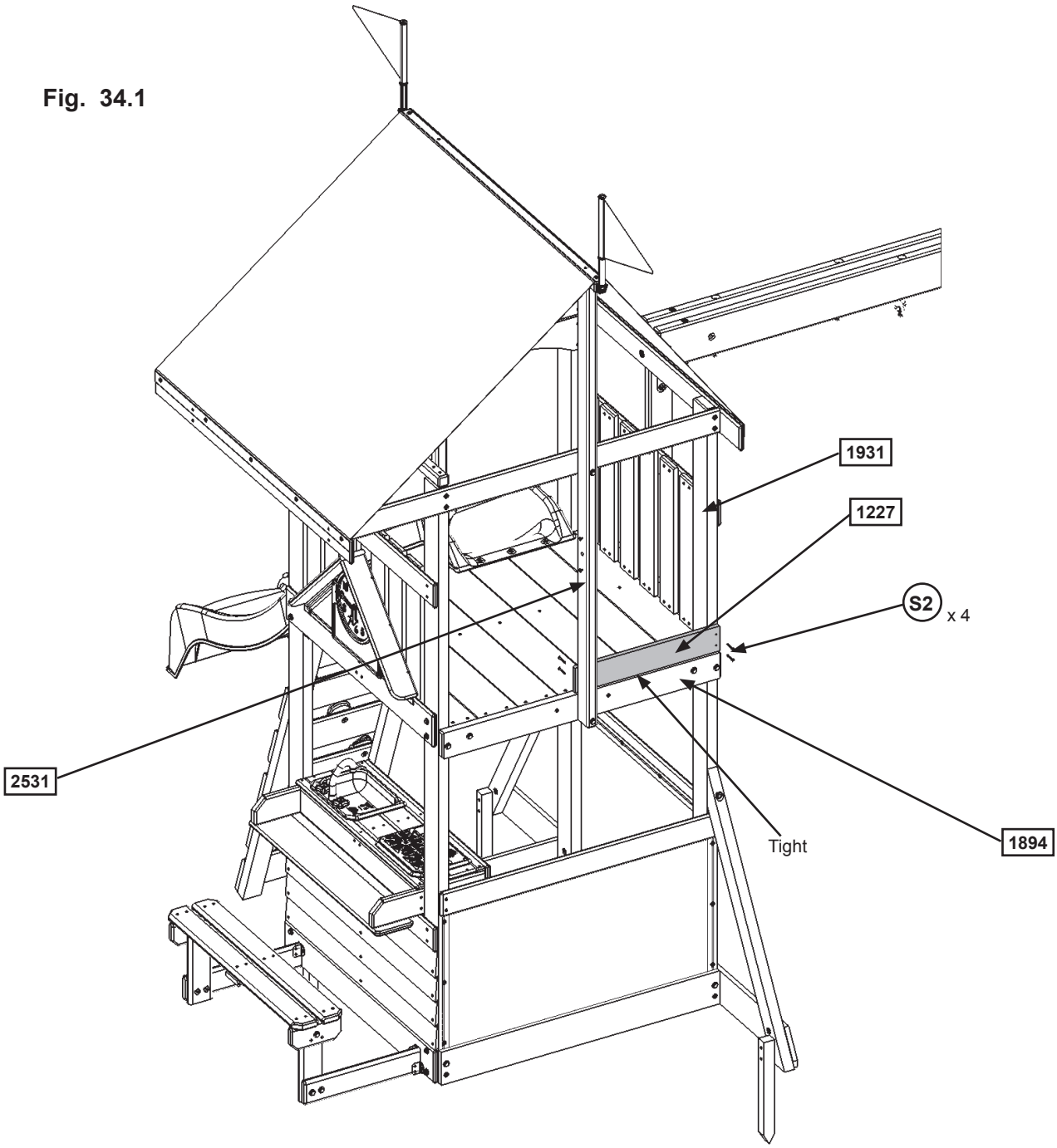

Wood Parts

1 x 1227 **CE Wall Board 1 x 4 x 20”**

Hardware

4 x S2 **#8 x 1-1/2” Wood Screw**

support@cedarsummitplay.com

Step 34: Back Wall Assembly Part 2

B: In between (1931) Post on the Swing Wall and (2531) MK Mount on the inside of the assembly evenly space and attach 3 (0304) CE Floor Boards to (2532) Top Front Back and (1227) CE Wall Board with 4 (S1) #8 x 1-1/8" Wood Screws per board. Make sure the bottom of the boards are tight against the floor boards. (fig. 34.2 and 34.3)

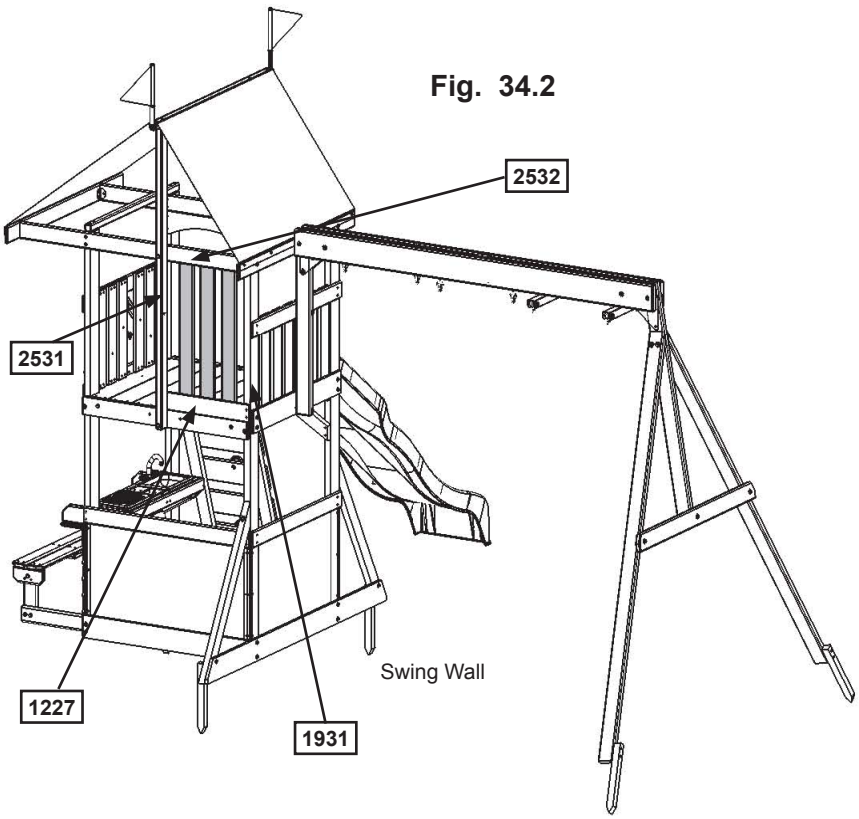

Fig. 34.2

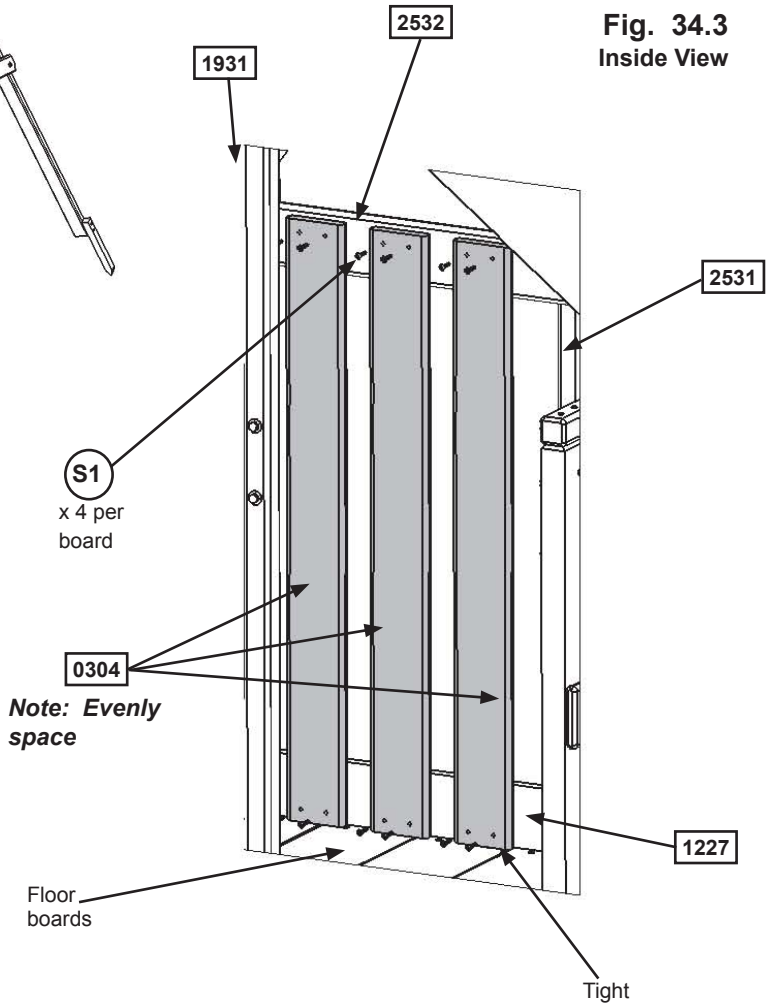

Fig. 34.3
Inside View

Wood Parts	Hardware
3 x 0304 CE Floor Board 1 x 4 x 32-1/2"	12 x S1 #8 x 1-1/8" Wood Screw

support@cedarsummitplay.com

Step 35: Monkey Rail Assembly

Pre-drill all pilot holes using a 1/8" drill bit before installing wood screws.

A: Insert 3 (578) 1-1/8 x 15-7/8" Dowels into both (1943) MK Rail Long and (1565) MK Rail Short as shown in fig. 35.1. Note that (1943) MK Rail Long will connect to the (1931) Post when attaching to the fort and (1565) MK Rail Short will connect to (2531) MK Mount and the pilot holes on the (1943) MK Rail Long are on the bottom of the board.

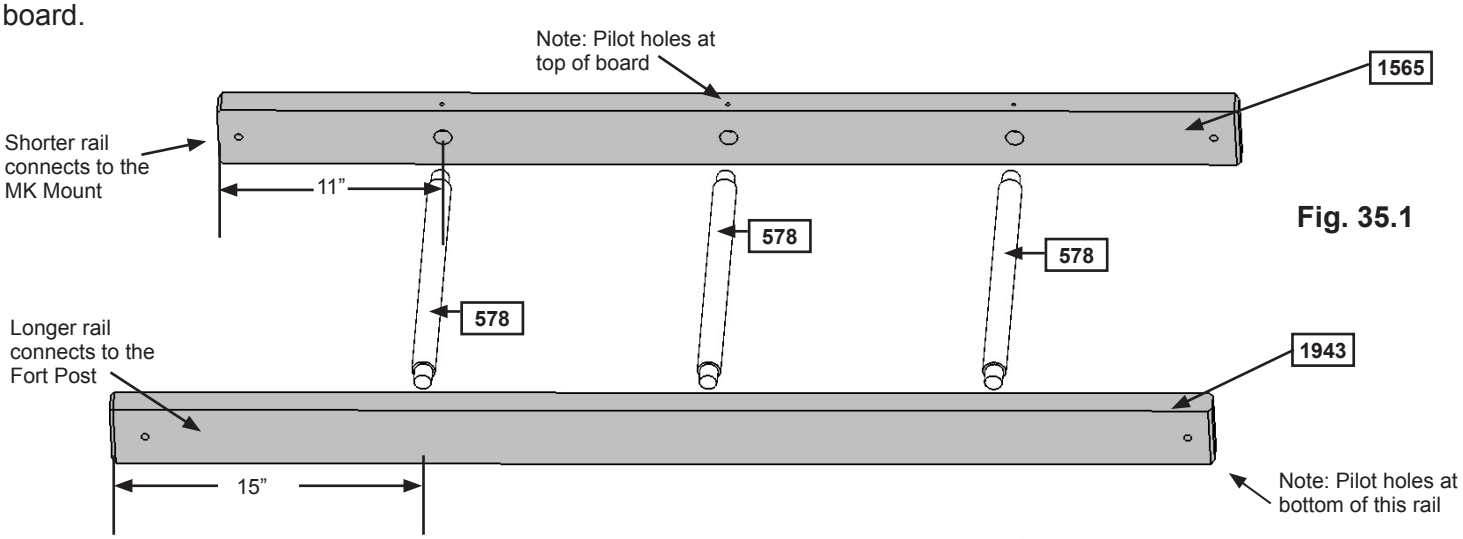

Fig. 35.1

B: Make sure shoulder of dowel is against each rail before pre-drilling pilot holes. Drill 1/8" pilot holes through the rails and into the dowels to prevent splitting. (fig. 35.2)

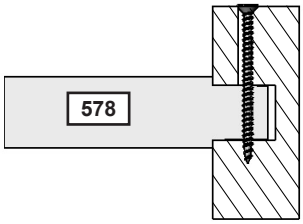

Fig. 35.2

Fig. 35.3

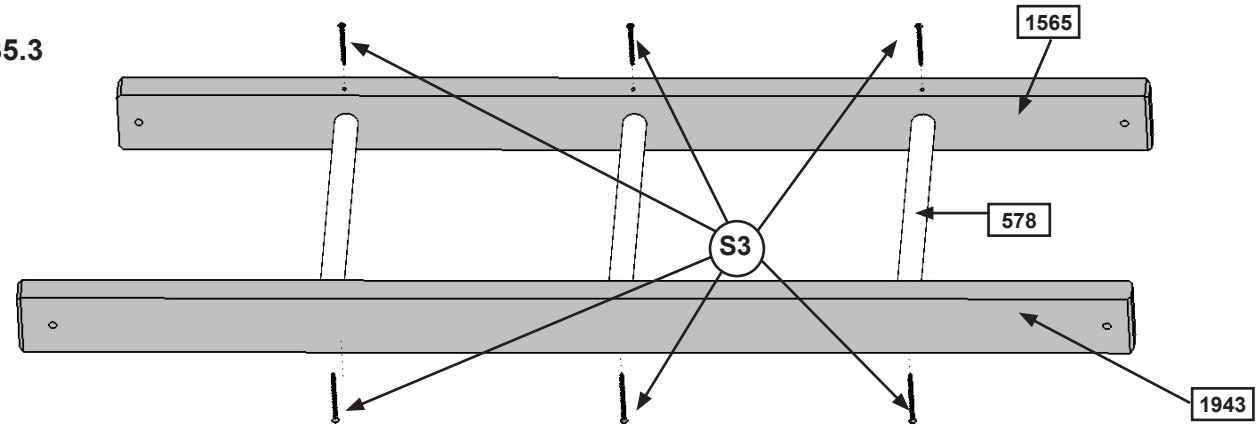

C: Attach (578) 1-1/8 x 15-7/8" Dowels to both rails with 2 (S3) #8 x 2-1/2" Wood Screws per dowel. Screws are installed from the bottom of the board on the (1943) MK Rail Long (fig. 35.3)

Wood Parts		Hardware	
3 x 578	Tennon Dowel 1-1/8 x 15-7/8"	6 x S3	#8 x 2-1/2" Wood Screw
1 x 1943	MK Rail Long 2 x 4 x 54"		
1 x 1565	MK Rail Short 2 x 4 x 50"		

support@cedarsummitplay.com

Step 36: Monkey Ladder Assembly

A: Insert 1 (858) 1-1/8 x 18-5/8” Dowel into 2 (1367) Post MK as shown in fig. 36.1.

Fig. 36.1

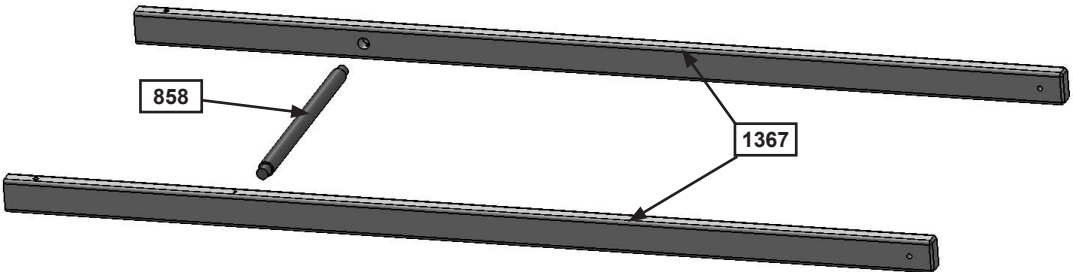

B: Make sure shoulder of dowel is against each post before pre-drilling pilot holes. Drill 1/8” pilot holes through the posts and into the dowel to prevent splitting. (fig. 36.2)

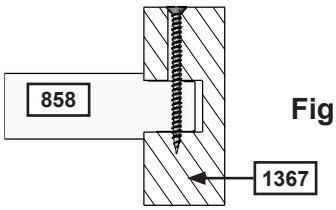

Fig. 36.2

C: Attach (858) 1-1/8 x 18-5/8” Dowel to both posts with 2 (S2) #8 x 1-1/2” Wood Screws. One screw is installed from top of the rails and the other from the bottom as shown in fig. 36.3.

D: At bottom of (1367) Post MK attach (0353) MK Ground with 2 (H12) 1/4 x 3” Hex Bolts (with lock washer, flat washer and t-nut). **Be sure to keep the bolts loose.** (fig. 36.3)

Note: Pre-drill all holes using a 1/8” drill bit before installing the lag screws.

E: Make sure the assembly is square and then attach 1 (0369) Lower Diagonal to each end of (0353) MK Ground with 1 (H2) 1/4 x 2” Hex Bolt (with lock washer, flat washer and t-nut) per diagonal, keeping the bolts loose, and to each (1367) Post MK with 1 (LS2) 1/4 x 2-1/2” Lag Screw (with flat washer) per diagonal. Once lag screws are installed tighten all bolts from Steps D & E. (fig. 36.3)

Fig. 36.3

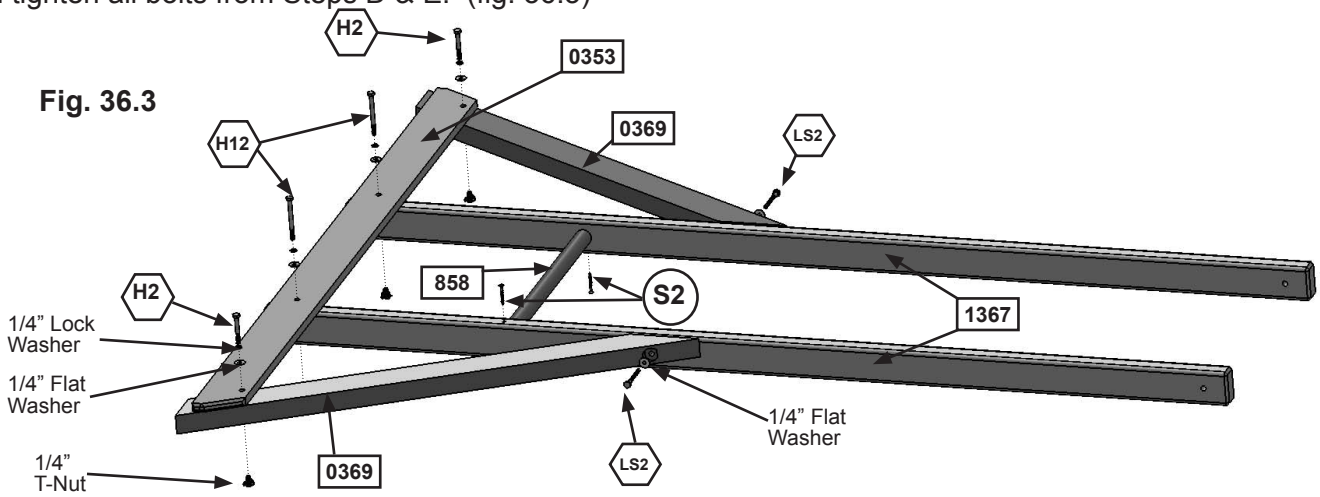

Wood Parts

2 x	0369	Lower Diagonal 2 x 3 x 37”
1 x	0353	MK Ground 1 x 4 x 55-1/4”
2 x	1367	Post MK 2 x 3 x 70”
1x	858	Tennon Dowel 1-1/8 x 18-5/8”

Hardware

2 x	H12	1/4 x 3” Hex Bolt (1/4” lock washer, 1/4” flat washer, 1/4” t-nut)
2 x	H2	1/4 x 2” Hex Bolt (1/4” lock washer, 1/4” flat washer, 1/4” t-nut)
2 x	LS2	1/4 x 2-1/2” Lag Screw (1/4” flat washer)
2 x	S2	#8 x 1-1/2” Wood Screw

support@cedarsummitplay.com

Step 37: Connect Monkey Bar Assemblies

Note: Pre-drill all holes using a 1/8" drill bit before installing the pan screws.

A: Using a MK Bracket connect both (1943) MK Rail Long and (1565) MK Rail Short to each (1367) Post MK with 1 (G10) 5/16 x 3" Hex Bolt (with lock washer, flat washer and t-nut) per bracket and MK Bracket to the rails using 2 (S6) #12 x 1" Pan Screws per rail as shown in fig. 37.1 and 37.2.

B: Attach MK Bracket to both (1367) Post MKs with 2 (S6) #12 x 1" Pan Screws per bracket. (fig. 37.2)

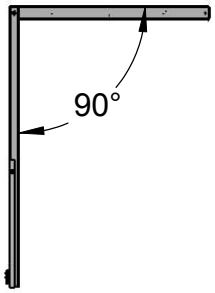

Fig. 37.1

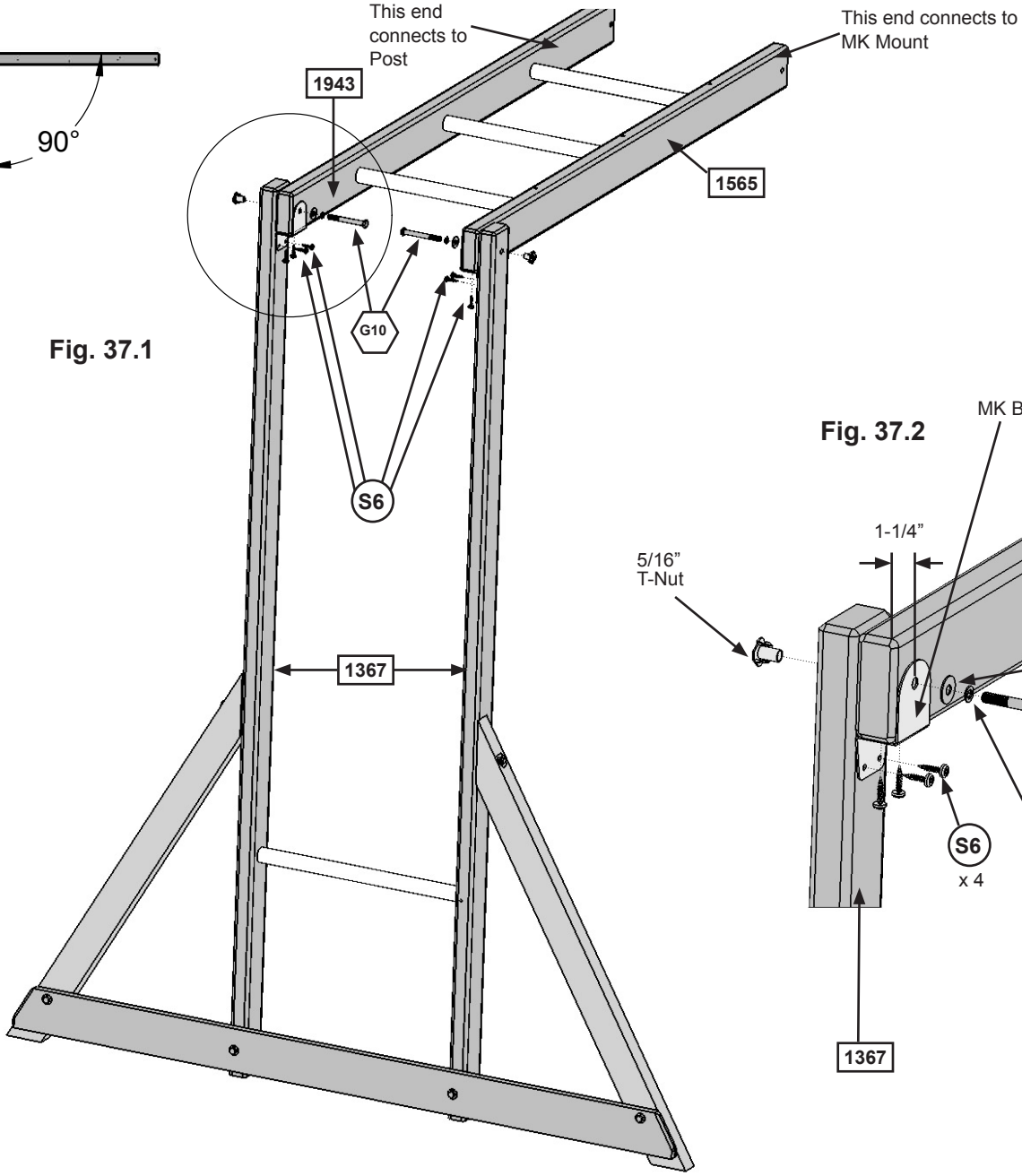

Fig. 37.2

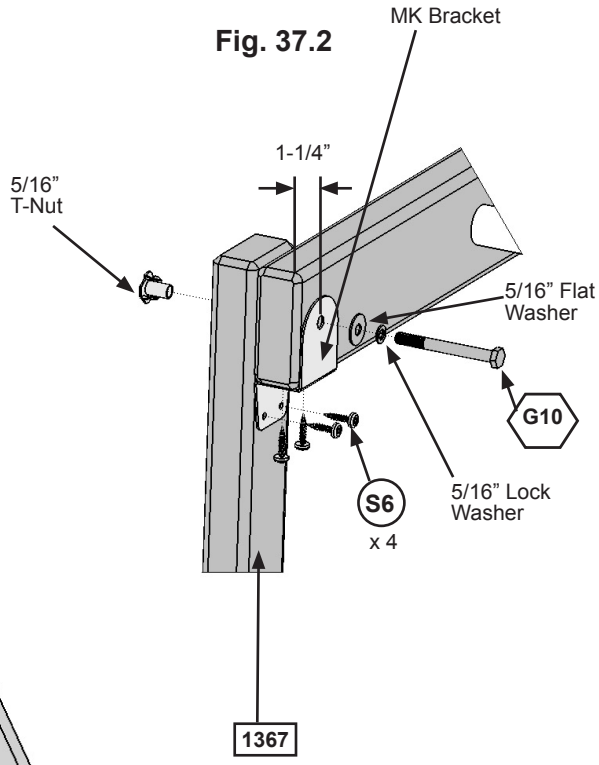

Hardware

2 x G10 **5/16 x 3" Hex Bolt (5/16" lock washer, 5/16" flat washer, 5/16" t-nut)**

8 x S6 **#12 x 1" Pan Screws**

Other Parts

2 x MK Bracket

Step 38: Connect Monkey Bar Assembly to Fort

Pre-drill all pilot holes using a 1/8" drill bit before installing the lag screws.

A: With a MK Bracket attach (1565) MK Rail Short to (2531) MK Mount with 1 (G10) 5/16 x 3" Hex Bolt (with lock washer, flat washer and t-nut) and 4 (S6) #12 x 1" Pan Screws, as shown in fig. 38.1 and 38.2.

B: Measure 21-1/2" from top of (1943) MK Rail Long to top of (1890) CE Gap Board, then with a MB Mount Strap attach (1943) MK Rail Long to (1931) Post using 1 (LS2) 1/4 x 2-1/2" Lag Screw (with flat washer) in the centre hole and 2 (S6) #12 x 1" Pan Screws in the 2 end holes as shown in fig. 38.1, 38.3 and 38.4.

Fig. 38.1

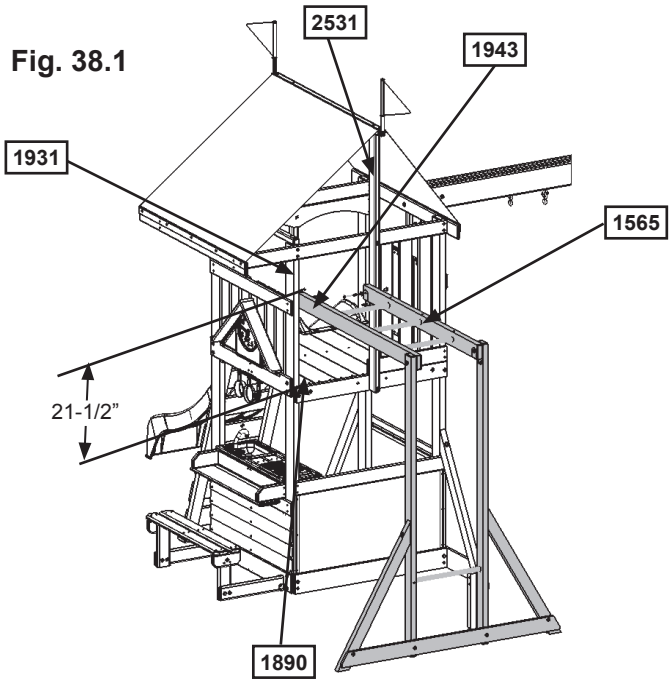

Fig. 38.2

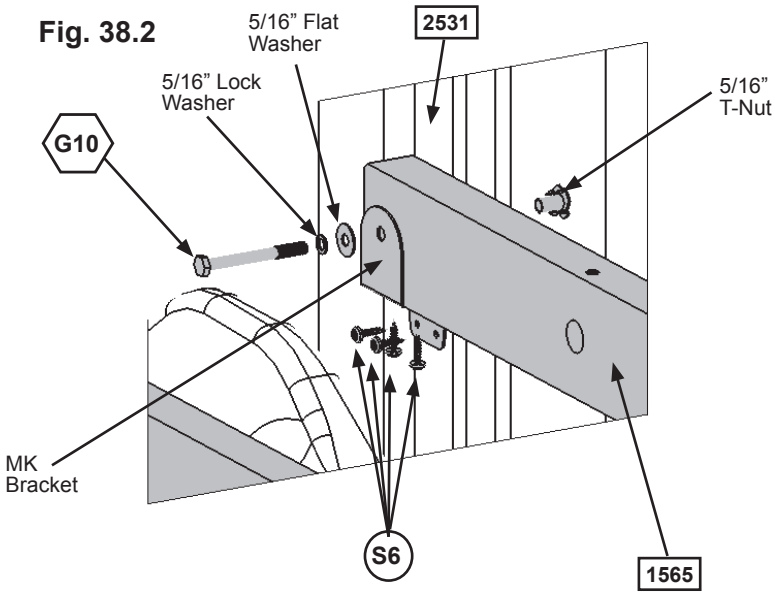

Fig. 38.3

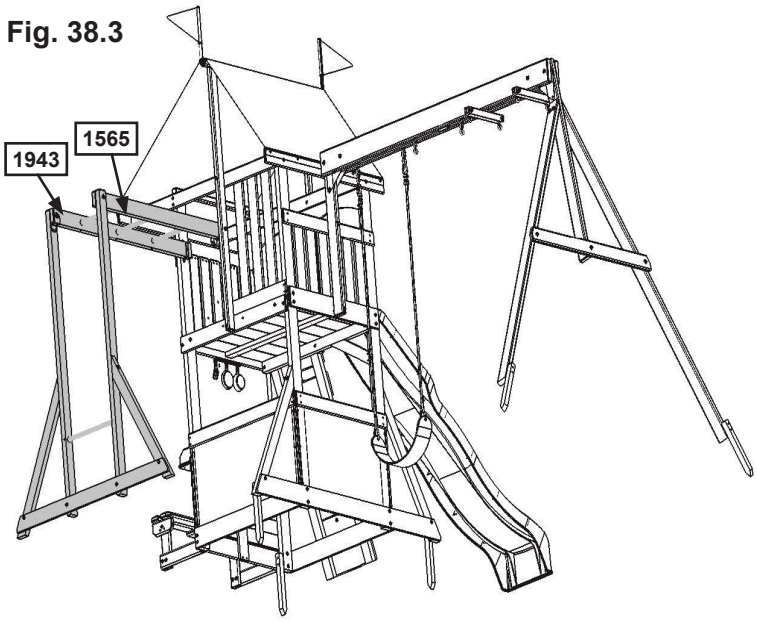

Fig. 38.4

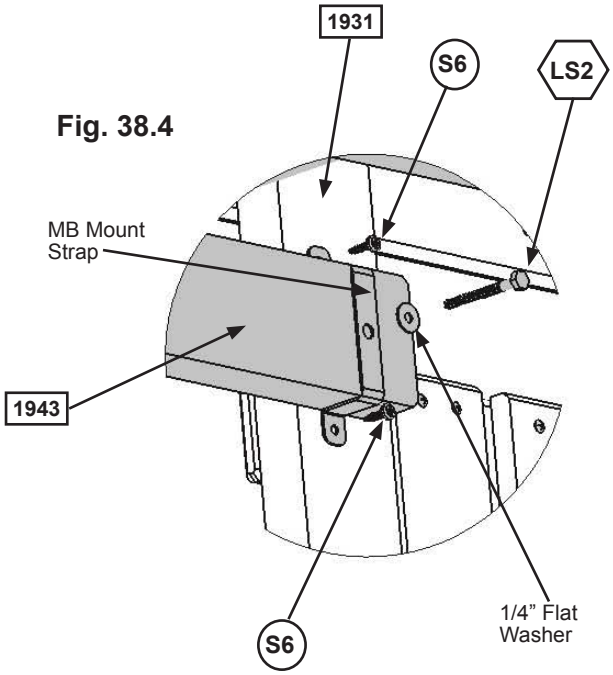

Hardware

6 x (S6) **#12 x 1" Pan Screw**

1 x (G10) **5/16 x 3" Hex Bolt (5/16" lock washer, 5/16" flat washer, 5/16" t-nut)**

1 x (LS2) **1/4 x 2-1/2" Lag Screw (1/4" flat washer)**

Other Parts

1 x MB Mount Strap

1 x MK Bracket

support@cedarsummitplay.com

Step 39: Attach Monkey End Ground Stake

A: Drive 1 (0318) Ground Stake 10-1/2” into the ground at one (1367) Post MK on the inside of the assembly and attach with 2 (S3) #8 x 2-1/2” Wood Screws. (fig. 39.1 & 39.2)

⚠WARNING: To prevent tipping and avoid potential injury, stakes must be driven 10-1/2” into ground. Digging or driving stakes can be dangerous if you do not check first for underground wiring, cables or gas lines.

Fig. 39.1

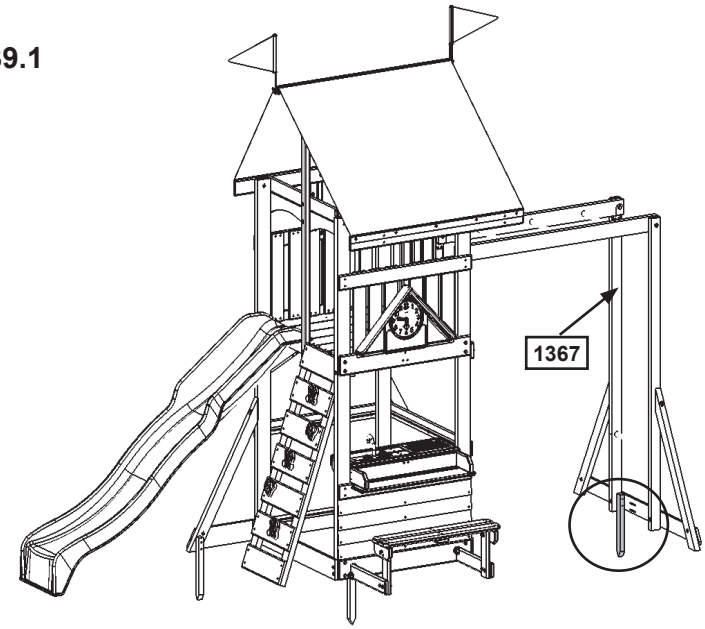

Fig. 39.2

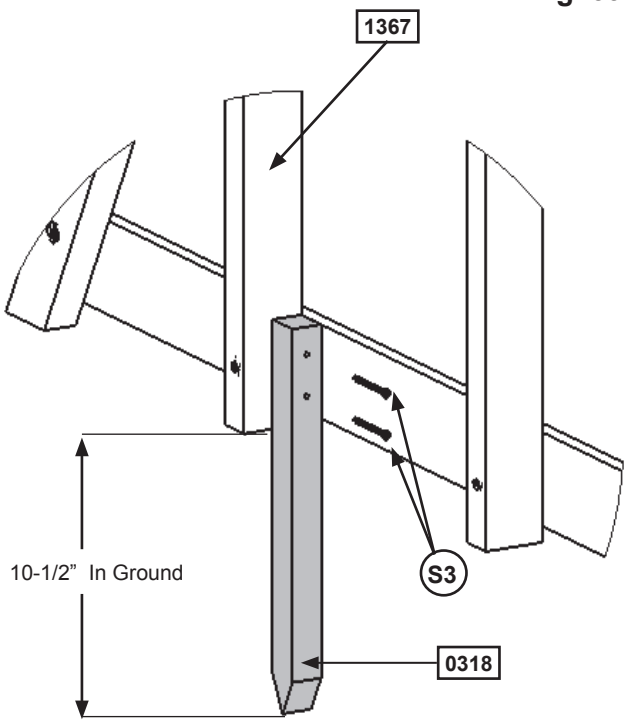

Wood Parts	Hardware
1 x 0318 Ground Stake 1-1/4 x 1-1/2 x 14”	2 x S3 #8 x 2-1/2” Wood Screw

Step 40: Glider Assembly

A: Attach 1 Glider End to the Glider Seat using 1 5/16” Glider Long Hex Bolt (with 2 flat washers and 1 lock nut). Repeat for the second Glider End. (fig. 40.1)

B: Install 2 Glider Rope with Chains into each Glider End using 2 - 5/16” Flat Washers and 1 Lock Nut per rope. (fig. 40.1)

Fig. 40.1

Glider may not be as shown. Appearance may vary.

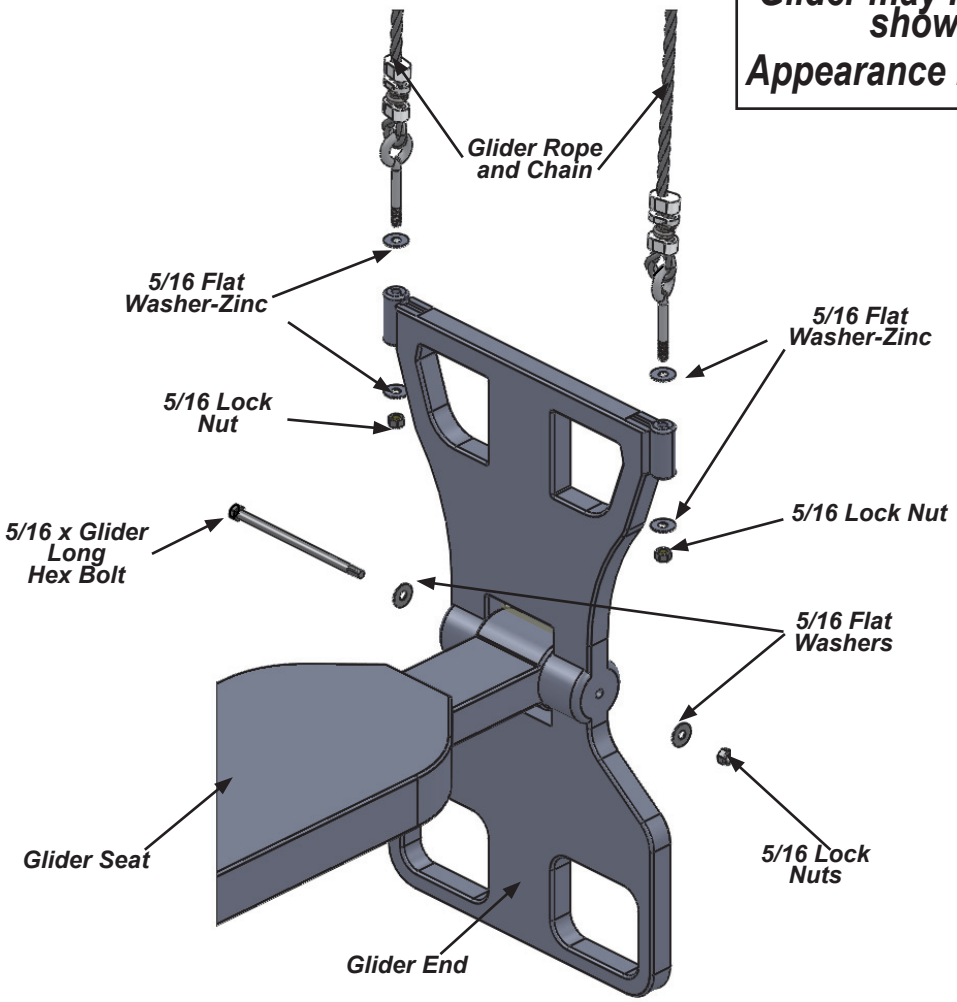

⚠WARNING: Bolt must not exceed 1/2 thread past the nut

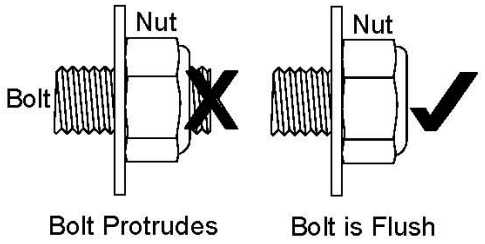

Hardware

2 x **5/16” Glider Long Hex Bolt (5/16” flat washer x 2, 5/16” lock nut)**

8 x 5/16” Flat Washer

4 x 5/16” Lock Nut

Other Parts

2 x Glider End

1 x Glider Seat

1 x Glider Rope and Chain (pkg of 4)

support@cedarsummitplay.com

Step 41: Attach Glider and Swings

⚠WARNING: Check entire play centre for bolts protruding beyond T-Nuts. Use extra washers to eliminate this condition.

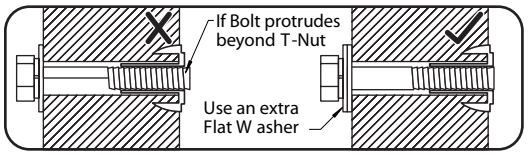

A: Connect the assembled Glider to the Glider Hangers previously installed. (fig. 41.1)

B: Attach 2 Belt Swings to the Bolt-Thru Swing Hangers. (fig. 41.1)

Fig. 41.1

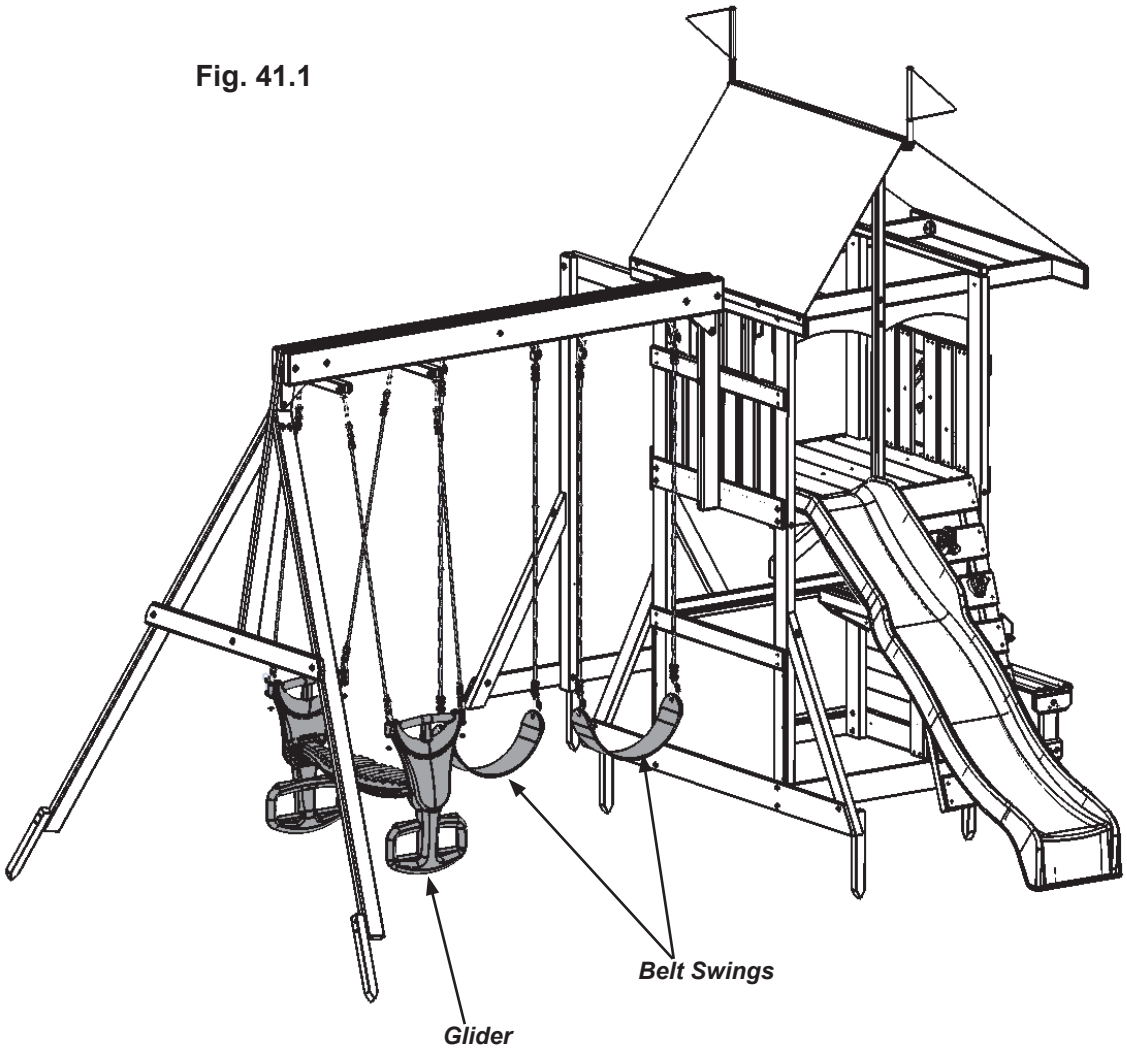

Other Parts

2 x Belt Swings

support@cedarsummitplay.com

Final Step: Attach I.D. Plaque

ATTACH THIS WARNING & I.D. PLAQUE TO A PROMINENT LOCATION ON YOUR PLAY EQUIPMENT! (Fort or Swing Post)

This provides warnings concerning safety and important contact information. A Tracking Number is provided to allow you to get critical information or order replacement parts for this specific model.

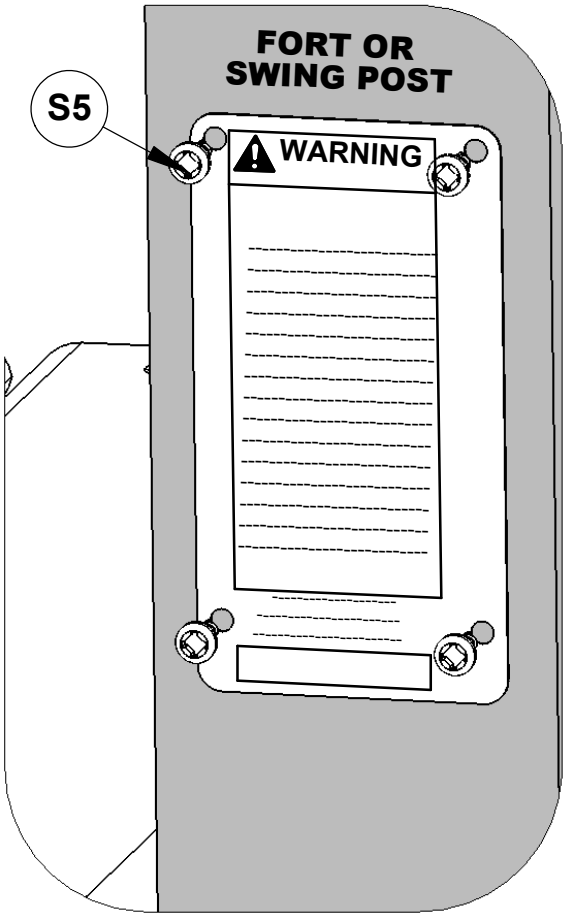

WARNING

CONTINUOUS ADULT SUPERVISION REQUIRED!

STRANGULATION HAZARDS

Never allow children to play with ropes, clotheslines, pet leashes, cables, chains or cord-like items when using this play-set or to attach these items to play-set.

Never allow children to wear loose fitting clothing, ponchos, hoods, scarves, capes, necklaces, or items with draw-strings, cords or ties when using this play-set.

Never allow children to wear bike or sport helmets when using this play-set.

Failure to prohibit these items increases the risk of serious injury and death to children from entanglement and strangulation.

SERIOUS HEAD INJURY HAZARD

Maintain shock absorbing material under and around play-set as recommended in the Installation & Operating Instructions. Installation over concrete, asphalt, dirt, grass, carpet and other hard surfaces creates a risk of serious injury or death from falls to the ground.

For children 3 to 10 years of age; weight limit of 110 lbs. per child. Maximum number of users, Installation & Operating Instructions; other information is available at:

www.cedarsummitplay.com

Contact us at: Solowave Design Corp.
Buffalo, New York USA 14075
1-877-817-5682

Tracking Number:

Attach with (S5) #8 x 1/2" Pan Screws to a location on your set that is easily seen and read by a supervising adult.

NOTES

support@cedarsummitplay.com

NOTES

support@cedarsummitplay.com

CEDAR SUMMIT

Consumer Registration Card

First Name | Initial | Last Name

Street | Apt. No.

City | State/Province | ZIP/Postal Code

Country | Telephone Number

E-Mail Address

Model Name | Model Number (Box Labels)

Serial Number (on ID Plaque)

Date Purchase (MM / DD / YY) | Purchased From

How would you rate this product for quality?

☐ Excellent ☐ Very Good ☐ Average ☐ Below Average ☐ Poor

How would you rate this product for ease of assembly?

☐ Excellent ☐ Very Good ☐ Average ☐ Below Average ☐ Poor

How would you rate our instructions?

☐ Excellent ☐ Very Good ☐ Average ☐ Below Average ☐ Poor

How would you rate the quality of packaging?

☐ Excellent ☐ Very Good ☐ Average ☐ Below Average ☐ Poor

Would you recommend the purchase of our products to friends and family?

☐ Yes ☐ No

Comments:

MAIL TO:

Solowave Design™
375 Sligo Road W.
Mount Forest, Ontario, Canada
N0G 2L0
Attention: Customer Service

REVISION: 11/28/12

Cedar Summit
PREMIUM PLAY SYSTEMS

Fill out your registration card online at
www.cedarsummitplay.com/registration

Cedar Summit would like to say Thank You for your time and feedback.

CUT ALONG LINE